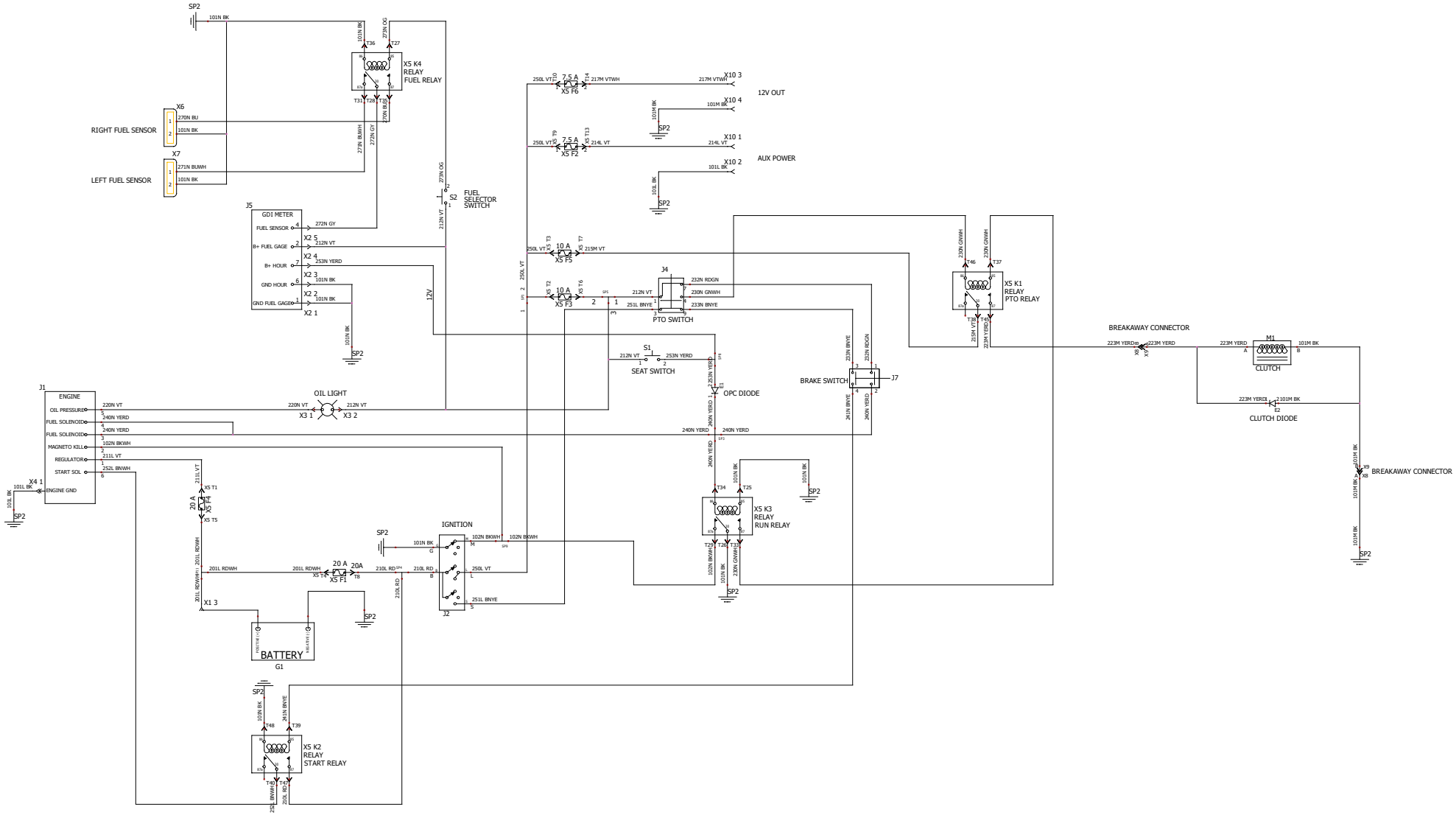
SP2
101N BK
X5 K4
RELAY
FUEL RELAY
X6
RIGHT FUEL SENSOR
X7
LEFT FUEL SENSOR
S2
FUEL
SELECTOR
SWITCH
J5
GDI METER
FUEL SENSOR
B+ FUEL GAGE
B+ HOUR
GND HOUR
GND FUEL GAGE
12V
X5 F6
7.5 A
12V OUT
X10 3
X10 4
X5 F2
7.5 A
AUX POWER
X10 1
X10 2
X5 F5
10 A
X5 F3
10 A
J4
PTO SWITCH
X5 K1
RELAY
PTO RELAY
BREAKAWAY CONNECTOR
M1
CLUTCH
CLUTCH DIODE
BREAKAWAY CONNECTOR
S1
SEAT SWITCH
OPC DIODE
BRAKE SWITCH
J7
J1
ENGINE
OIL PRESSURE
FUEL SOLENOID
FUEL SOLENOID
MAGNETO KILL
REGULATOR
START SOL
ENGINE GND
X4 1
OIL LIGHT
X3 1
X3 2
20 A
X5 F4
X5 K3
RELAY
RUN RELAY
IGNITION
J2
20 A
X5 F1
20A
BATTERY
G1
X5 K2
RELAY
START RELAY