ARIENS | ACADEMY

# Francis Ariens Service School 2022



# TABLE OF CONTENTS


**PRODUCT OVERVIEW** **1**

ELECTRICAL SYSTEMS 7

**ELECTRICAL DIAGNOSTICS** **23**

**PARKING BRAKE SYSTEM** **31**

**SUSPENSION POD REMOVAL / INSTALL** **39**

**SUSPENSION POD DISASSEMBLY** **49**

**HTG TRANSMISSION REPLACEMENT** **65**

HTG TRANSMISSION OVERVIEW 83

HTG TRANSMISSION DISASSEMBLY 95

HTG TRANSMISSION ASSEMBLY 121

**DECK SYSTEM TROUBLESHOOTING** **141**

**SERVICE LETTERS & BULLETINS** **149**

# Product Overview

## Pro-Turn 600



# Learning Objectives

After completing this course, you will...

- Understand the key features of the Pro-Turn 600
- Identify differences from other products
- Identify serviceability components
- Know what accessories are available for the Pro-Turn 600

# Pro-Turn 600

- Three deck sizes
  - 992500 – 52"
  - 992501/992503 – 60"
  - 992502/992054 – 72"
- Engine configurations include
  - Kawasaki FX850, FX1000, FX1000 EFI
- Ogura GT3.5 PTO Clutch
- 15 mph / 7 mph capacity
- 12.7-gallon fuel capacity



# Suspension Pod – General Information

- Weighs approximately 210lbs.
- Front and rear coil-over shocks.
- Removes with only 6 bolts.
- Adjustable foot platform.
- Foot platform lifts for access to deck system.
- Serviceable parts.



# X-Factor 3 Deck – General Information

- 7-gauge steel deck
- Uses same blades as other models
- Larger discharge opening
- Angled front nose
- New front baffle design
- Constant tension belt system

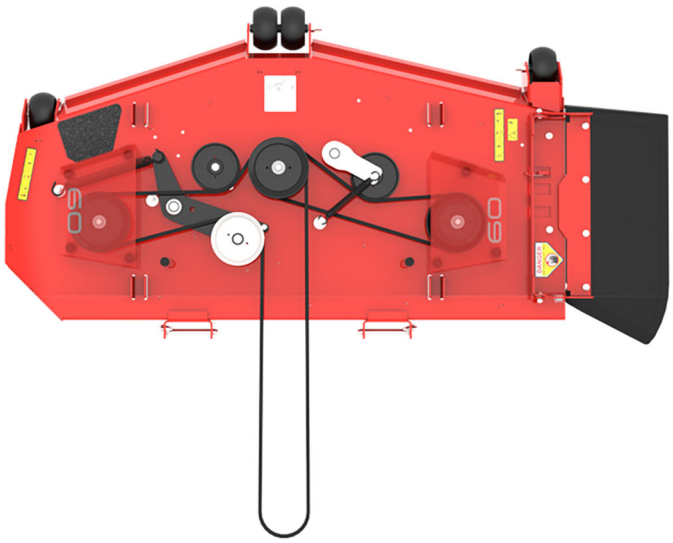

# Parker HTG Transaxles – General Information

- Speeds up to 15mph
- 1000hr service life
- Ability to carry heavier loads
- Easy access to bypass valves
- Disc brake parking brake
- Easy to view expansion tanks
- Service kits (p/n 70724100)



# Other Key Features

- 26" Low-profile Tires
- Digital fuel gauge
- 5 year or 1500 hour warranty
- HOC selector wheel
- Adjustable deck lift pedal



# Control Panels




# Accessories

- Rear tweel kit (p/n 79220500)
- LED light kit (p/n 79220900)
- Operator Control Discharge Baffle (p/n 79221600)
- Stripping Kit (p/n 79221800)
- 3-Bag bagger (p/n 89205300)
- Dump from seat bagger (p/n 89205400)
- All current accessories found on Dealer Extranet or Gravely.com



# Assembly

- Critical assembly procedure to ensure operation
- Steps include:
  - Setup ROPs
  - Positioning seat into operating position
  - Mounting seat plate to suspension POD
  - Seat stop bolts
  - Setup steering control arms

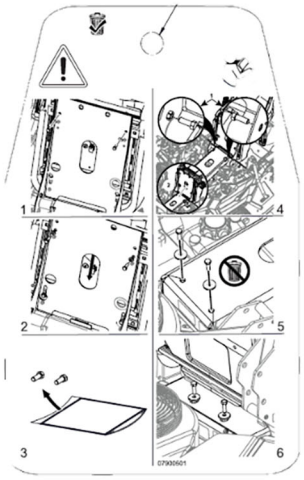


# Key Take-Aways

- Understand general information of Pro-Turn 600 features
  - Suspension POD
  - Parker HTG transaxles
  - X-Factor 3 deck
- Current available accessories
- General service information

# Electrical Systems

## Pro-Turn 600



# Learning Objectives

After completing this course you will…

- Know how to Access a Service Report
- Understand the Information a Service Report Provides
- Know how to Save a Service Report.

# Wire Schematic Overview

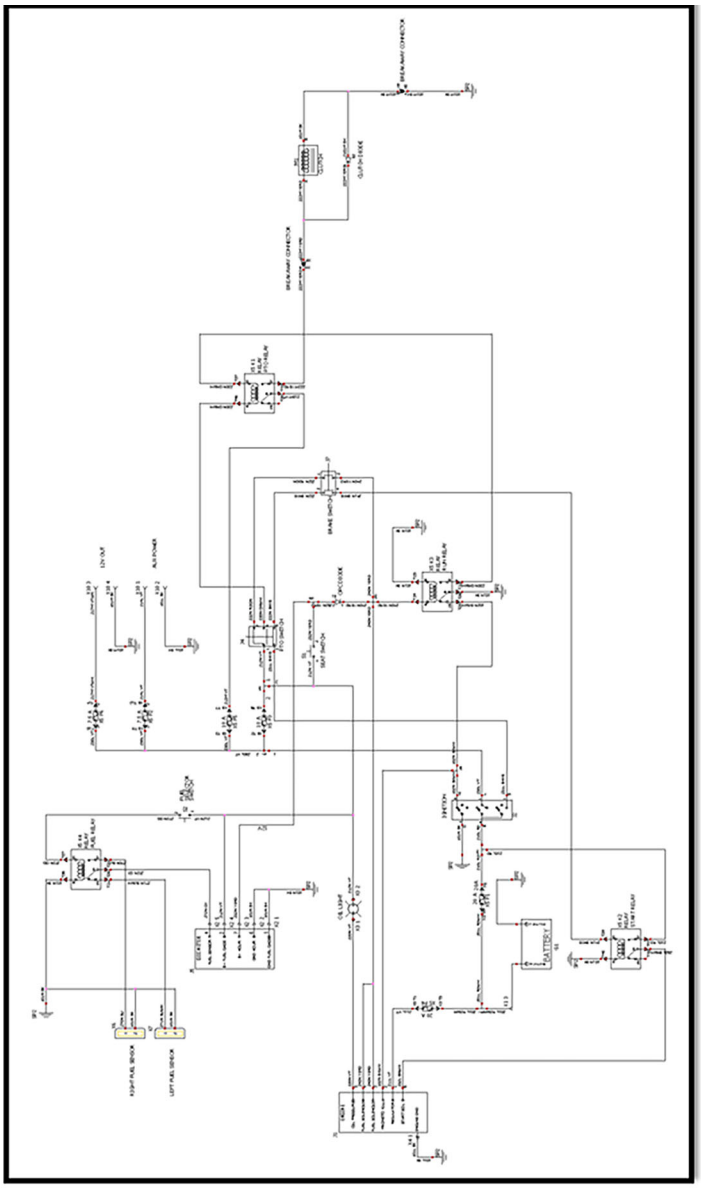

ciples of Operation

Key Off – Live Circuits / Grounds

Cranking Circuit

Run Circuit: OPC Open, Brake Engaged, PTO Off

Run Circuit: OPC Closed, Brake Disengaged, PTO Off

Run Circuit: OPC Closed, Brake Disengaged, PTO On

**Principle of Operation 1**
Key Off – Live Circuits
Grounds

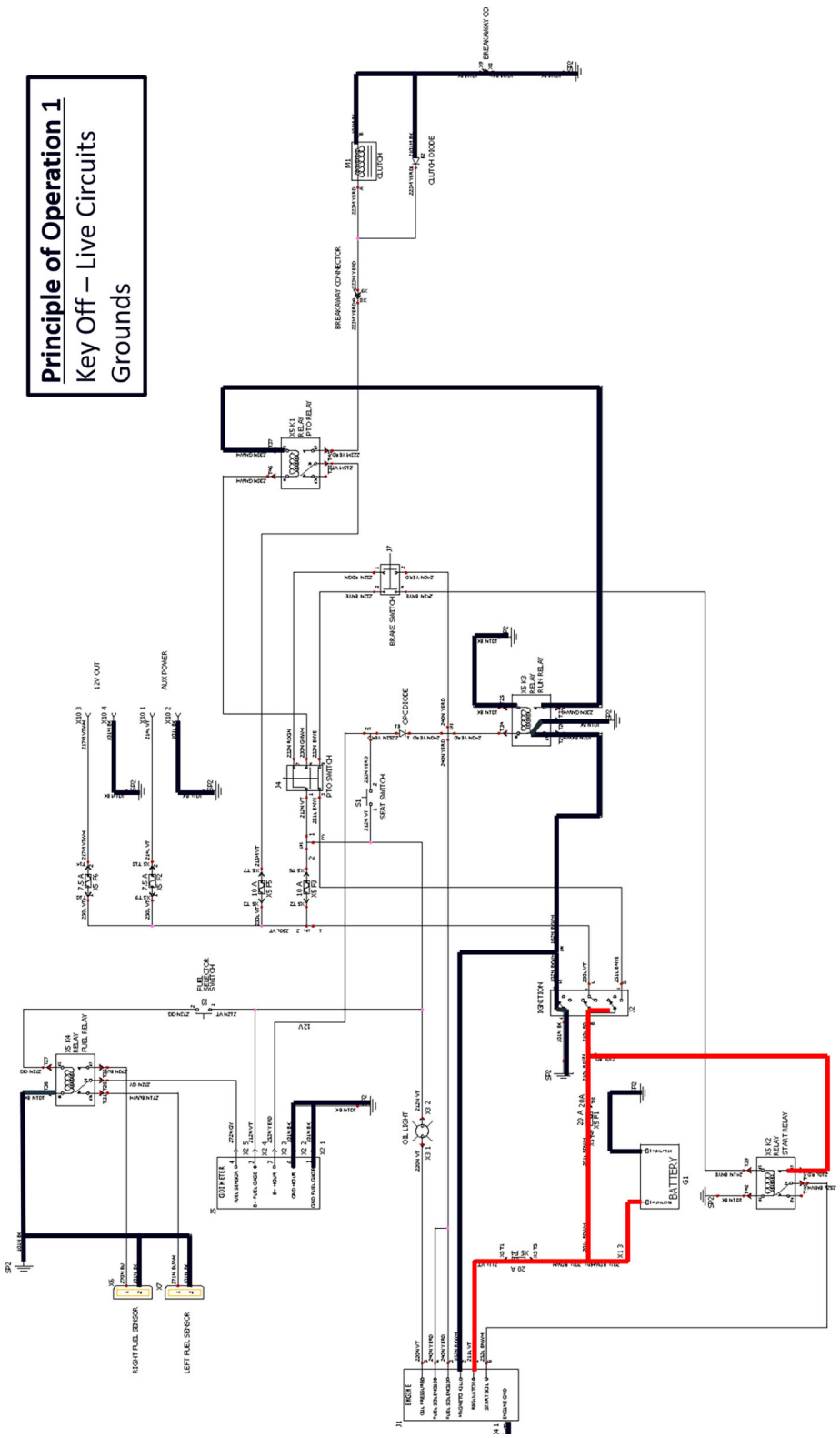

**Principle of Operation 2**
Key in Start Position
Cranking Circuit

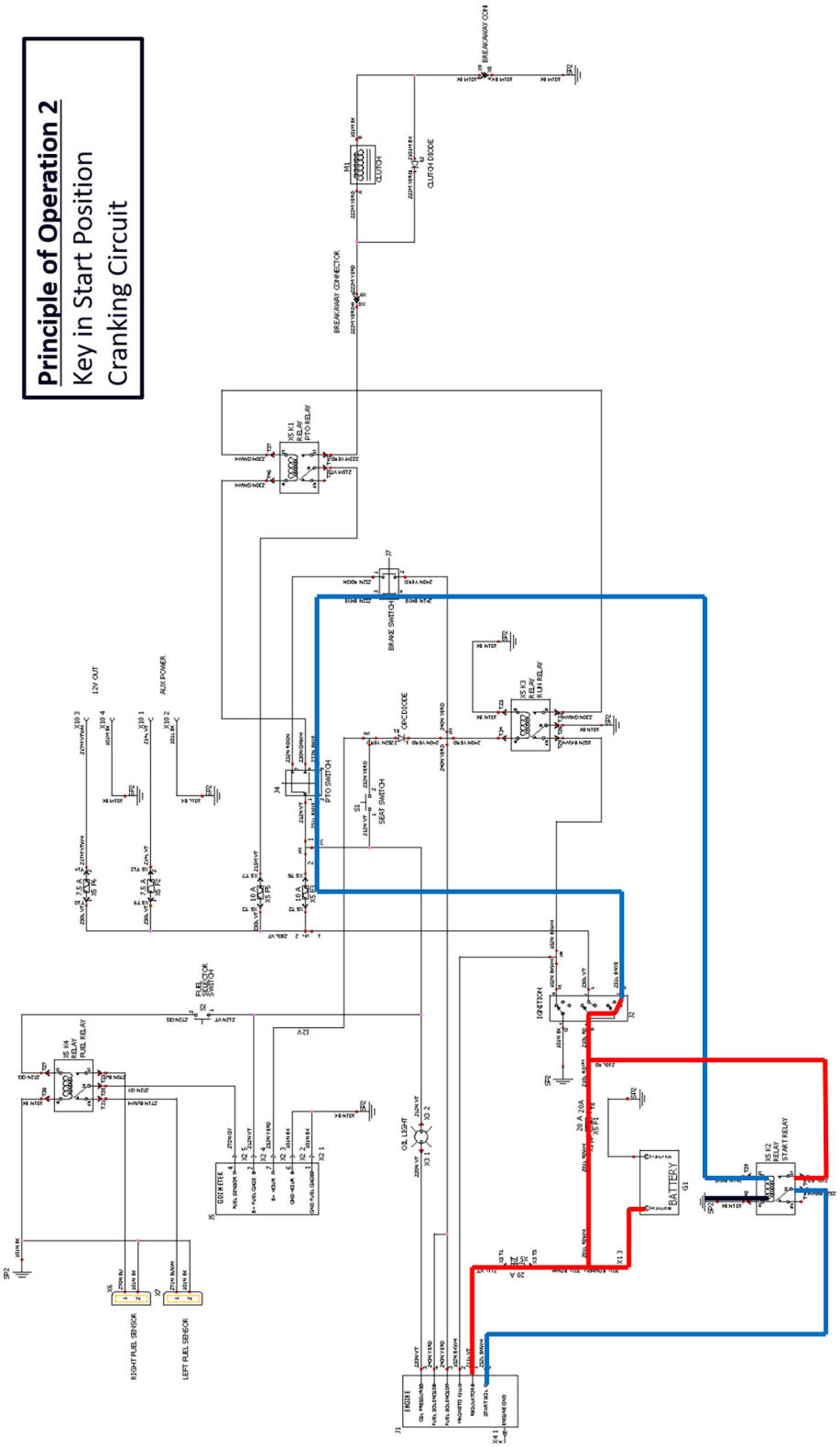

**Principle of Operation 3**

Key in the Run Position
OPC Open
Parking Brake Engaged
PTO Off

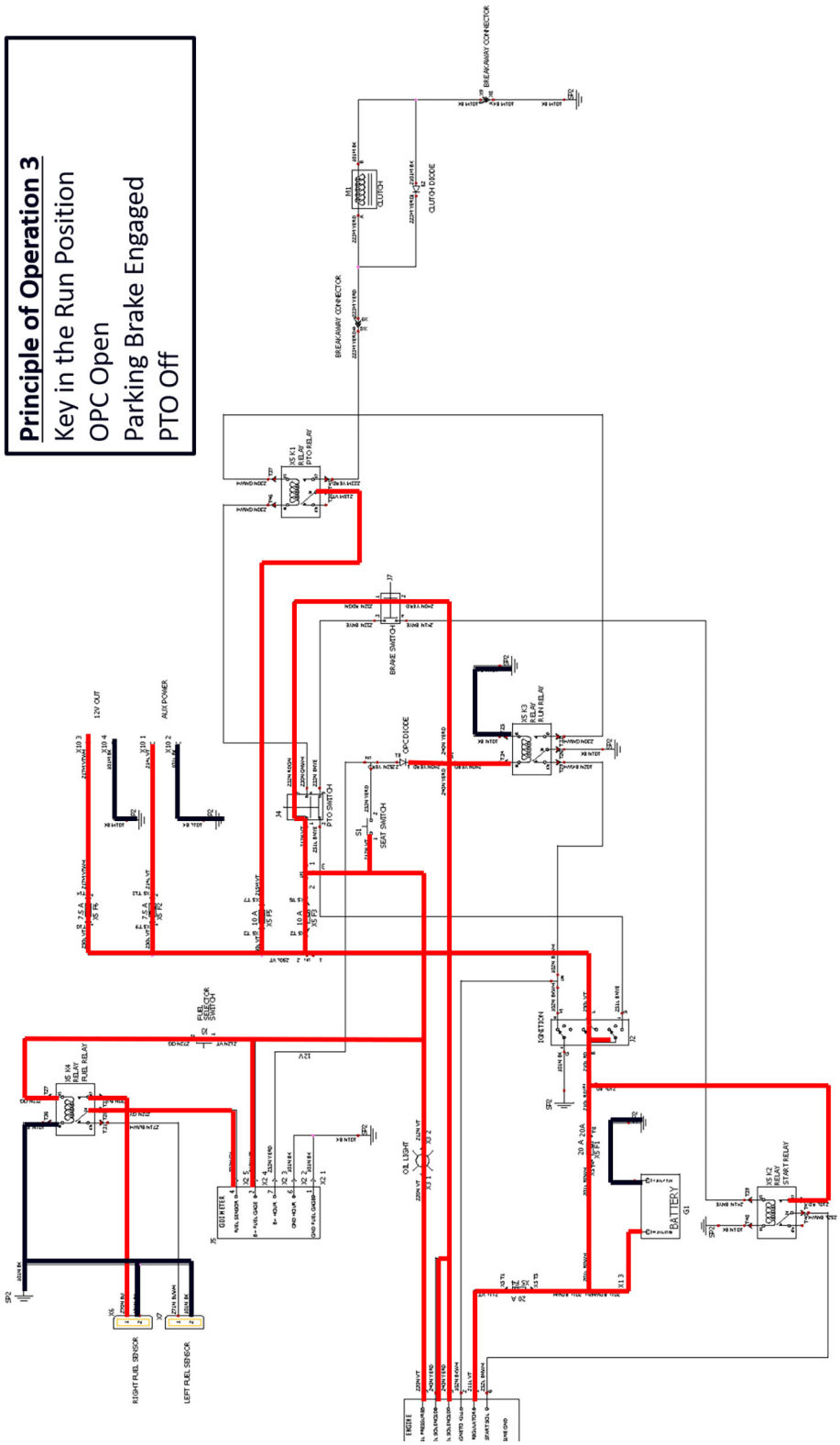

**Principle of Operation 4**

Key in the Run Position
OPC Closed
Parking Brake Disengaged
PTO Off

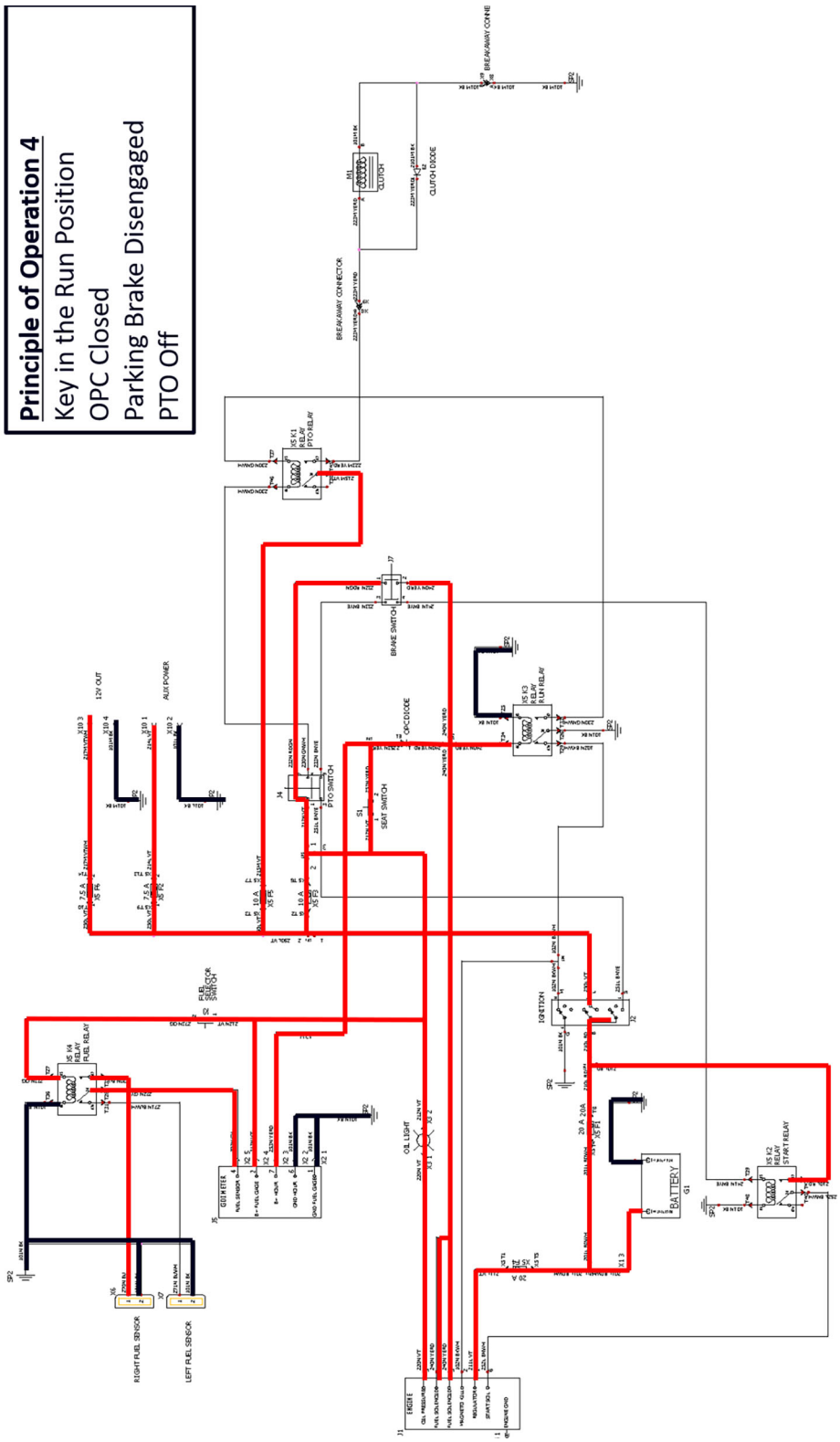

**Principle of Operation 5**

Key in the Run Position
OPC Closed
Parking Brake Disengaged
PTO On

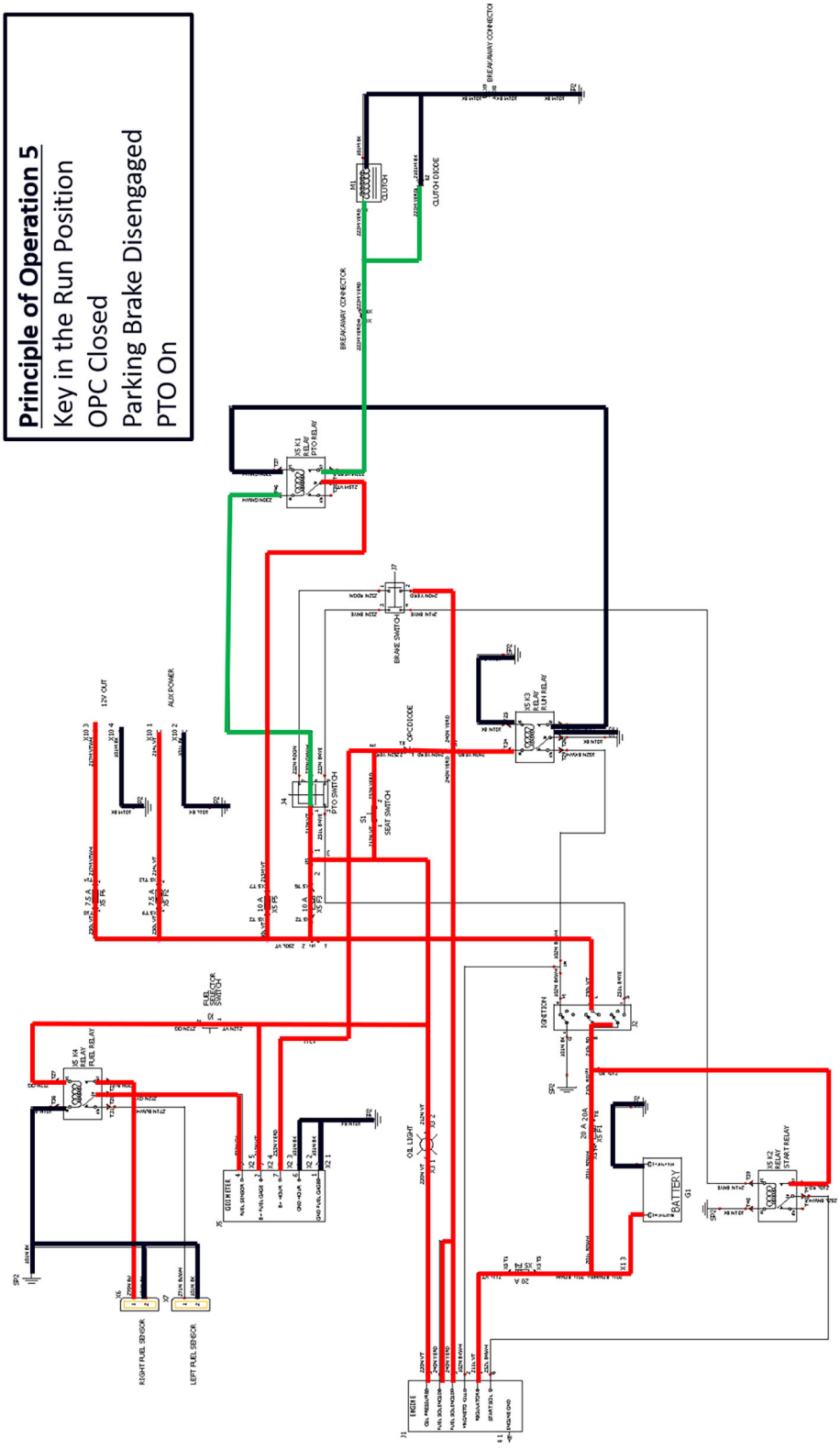

# EFI Adaptor Schematic

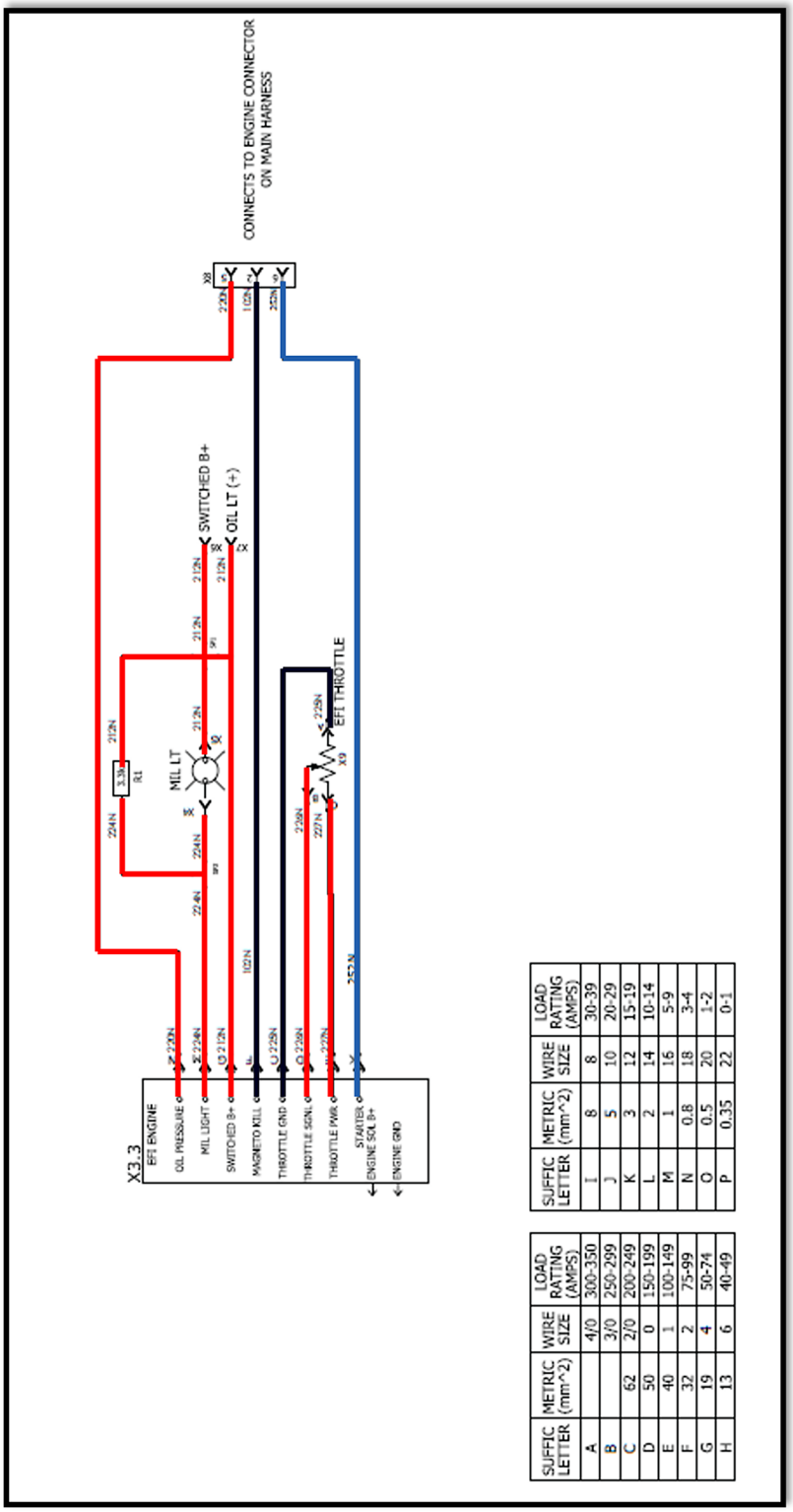

# EFI Engine Connector

Oil Pressure connection: functions with the oil pressure light on the control panel. Determines if oil pressure is within specification during operation.

Mil light connection: reports any engine malfunction errors. The Mil Light on the control panel works with a resistor in the harness, identified as R1. Allows power to Switched B+ Connection.

Switched B+ connection: where power goes into the engine to power the ECU on the EFI system. Connects through the MIL light connection.

Magneto Kill connection: allows the engine to turn off when the ignition switch is turned off.

Throttle Power: runs on a 5-volt circuit. The Throttle Power connection is the output power from the ECU for the potentiometer.

Throttle Signal: is the input power to tell the engine the desired throttle position from the potentiometer.

Throttle Ground: is the ground connection for this circuit.

Starter connection: is for the cranking circuit in the wire harness and allows the high amperage circuit from the battery to turn the engine over.

# Continuity Diagram

- Provided in the PT-600 Parts Manual
- 5-Position Key Switch
  - Can conduct continuity checks in each position to verify function.
- 5 Pin PTO Switch – standard to Gravely Zero-Turns.
  - Can conduct continuity checks in both positions.
  - Part of safety interlock system
- Brake Switch
  - Can conduct continuity checks in both positions.
  - Part of the safety interlock system
- Seat Switch
  - Normally open
  - Can conduct continuity checks in both positions.

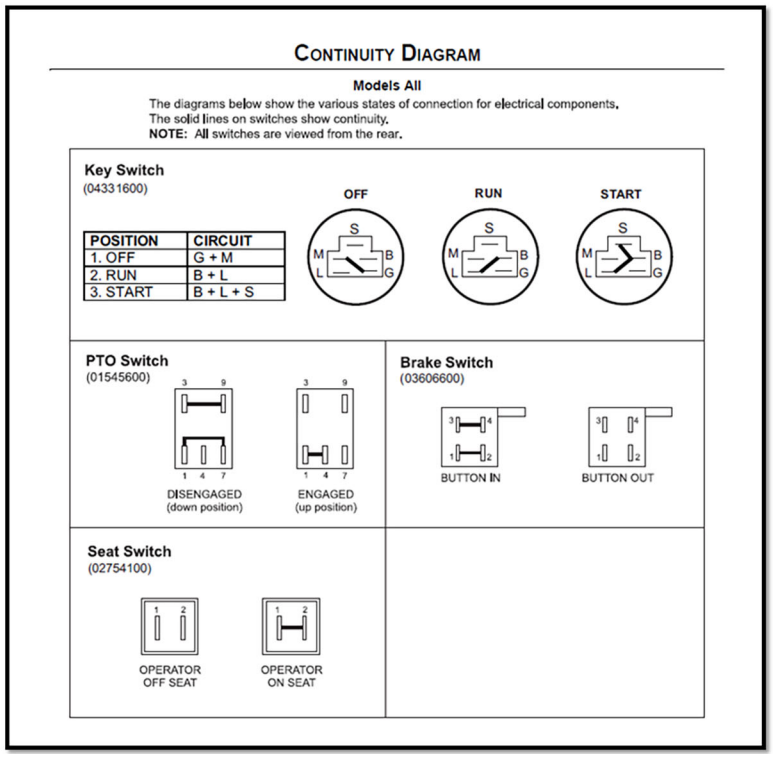

# Fuel Selector Switch & Magnetic Pick-up

- Fuel Valve Switch with magnet – 09389900
  - Manually select which fuel tank to pull fuel from during operation.
  - Connects right and left tanks to engine.
  - Has simple ball valve style internals.
  - Has magnetic handle.
- Magnetic Switch – 09197300
  - Uses magnetic pick-up to allow power to reach the Fuel Relay and send power to right or left sender.
  - Must be within 3/16" from valve selector magnet to activate.
  - Is adjustable up and down.

*If the magnet or magnetic switch fail, the fuel gauge will default to the left tank readings.



# Fuel System

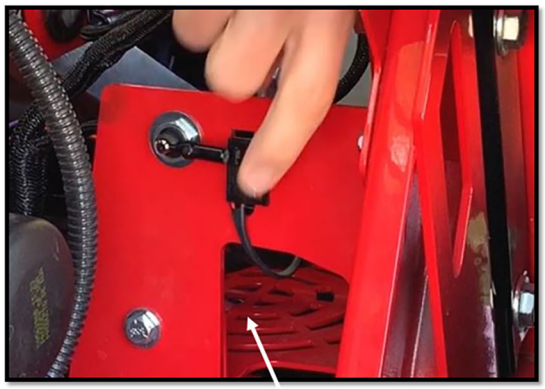

Magnetic Pickup Switch

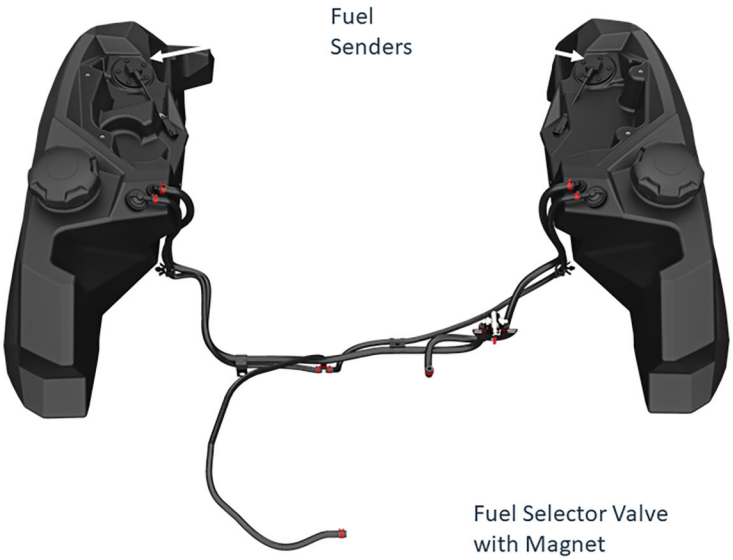

# Fuel Sender

- Located at the front of both gas tanks.
- Part # - 09361600
- Takes a resistance reading based on float level/gas level.
- Resistance measurement tracks gas level on GDI meter.
- Range is from 32 – 301 ohms.
- 10 increments on the fuel gauge for each resistance levels.
- Uses 2-pin Deutsch connector.



# GDI Meter

- Same meter used on the Mammoth 850.
- Part # 09377100
- Will record hours whenever OPC is closed.
- Will show fuel level based on resistance reading from the fuel sender.
- Has five insulated terminals that plug into underside of meter.



# Ogura Clutch

- Ogura GT3.5 Electric PTO Clutch
- Standard armature, rotor, and field coil.
- Armature engages rotor when PTO Switch is engaged, closing air gap.
- Adjustable air gap model. No reversible brake plates.
- Video on Ogura's website.



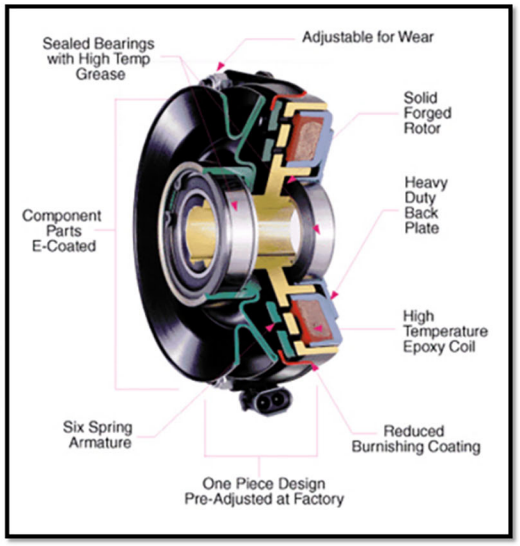


# Clutch Troubleshooting

- Use Ogura's Clutch Checklist for troubleshooting.
- Conduct visual inspection.
- Conduct mechanical inspection.
- Check resistance in the field coil. Should have 2.12 ~ 2.88 Ohms.
- Resistance reading is specified in Parts Radar.

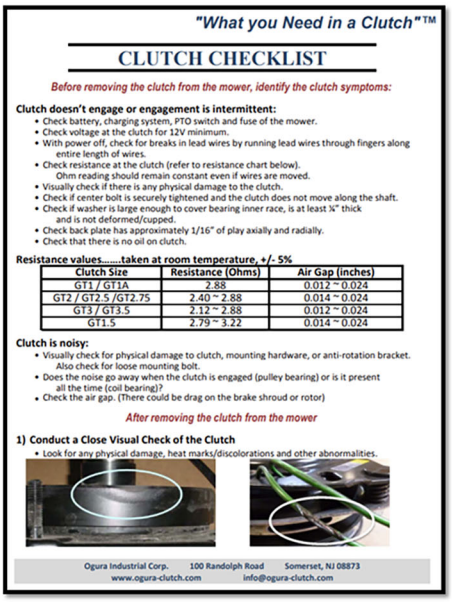

"What you Need in a Clutch"™

CLUTCH CHECKLIST

*Before removing the clutch from the mower, identify the clutch symptoms:*

**Clutch doesn't engage or engagement is intermittent:**

- Check battery, charging system, PTO switch and fuse of the mower.
- Check voltage at the clutch for 12V minimum.
- With power off, check for breaks in lead wires by running lead wires through fingers along entire length of wires.
- Check resistance at the clutch (refer to resistance chart below). Ohm reading should remain constant even if wires are moved.
- Visually check if there is any physical damage to the clutch.
- Check if center bolt is securely tightened and the clutch does not move along the shaft.
- Check if washer is large enough to cover bearing inner race, is at least ¼" thick and is not deformed/cupped.
- Check back plate has approximately 1/16" of play axially and radially.
- Check that there is no oil on clutch.

**Resistance values.....taken at room temperature, +/- 5%**

| Clutch Size | Resistance (Ohms) | Air Gap (inches) |
|---|---|---|
| GT1 / GT1A | 2.88 | 0.012 ~ 0.024 |
| GT2 / GT2.5 /GT2.75 | 2.40 ~ 2.88 | 0.014 ~ 0.024 |
| GT3 / GT3.5 | 2.12 ~ 2.88 | 0.012 ~ 0.024 |
| GT1.5 | 2.79 ~ 3.22 | 0.014 ~ 0.024 |

**Clutch is noisy:**

- Visually check for physical damage to clutch, mounting hardware, or anti-rotation bracket. Also check for loose mounting bolt.
- Does the noise go away when the clutch is engaged (pulley bearing) or is it present all the time (coil bearing)?
- Check the air gap. (There could be drag on the brake shroud or rotor)

*After removing the clutch from the mower*

**1) Conduct a Close Visual Check of the Clutch**

- Look for any physical damage, heat marks/discolorations and other abnormalities.





Ogura Industrial Corp. 100 Randolph Road Somerset, NJ 08873
www.ogura-clutch.com info@ogura-clutch.com



# Air Gap Adjustment

- Measure air gap through inspection slots on brake shroud.
- Adjust the air gap by turning the 3 adjustment nuts.
- Gap should be 0.012" ~ 0.024". Do not over tighten the nuts as this may force the rotor and armature into contact.
- After adjustment, the rotor should spin freely by hand with no power supplied.
- If there is drag, loosen the adjustment nuts ¼ turn until drag is removed.

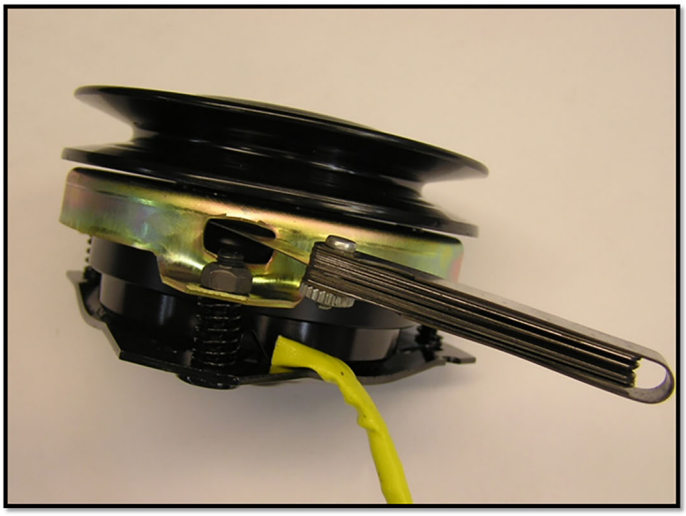

# Fuse Block

| Component | Function |
|---|---|
| F1 20A | Main Fuse |
| F2 7.5A | Aux Power Fuse |
| F3 10A | Controls Fuse |
| F4 20A | Regulator Fuse |
| F5 10A | PTO Fuse |
| F6 7.5A | 12V Out Fuse |
| K1 | PTO Relay |
| K2 | Start Relay |
| K3 | Run Relay |
| K4 | Fuel Relay |

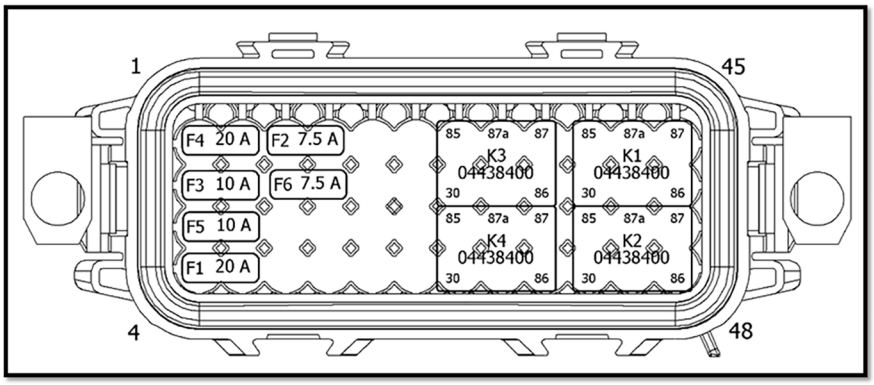


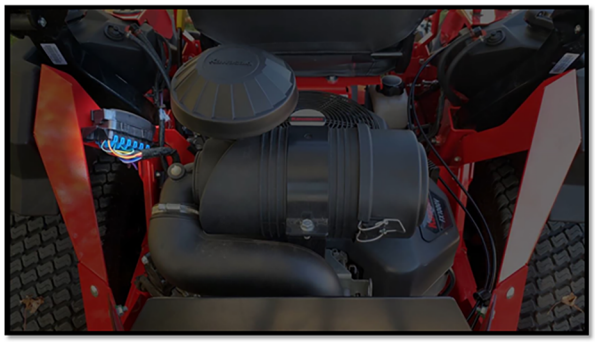

# Harness Routings



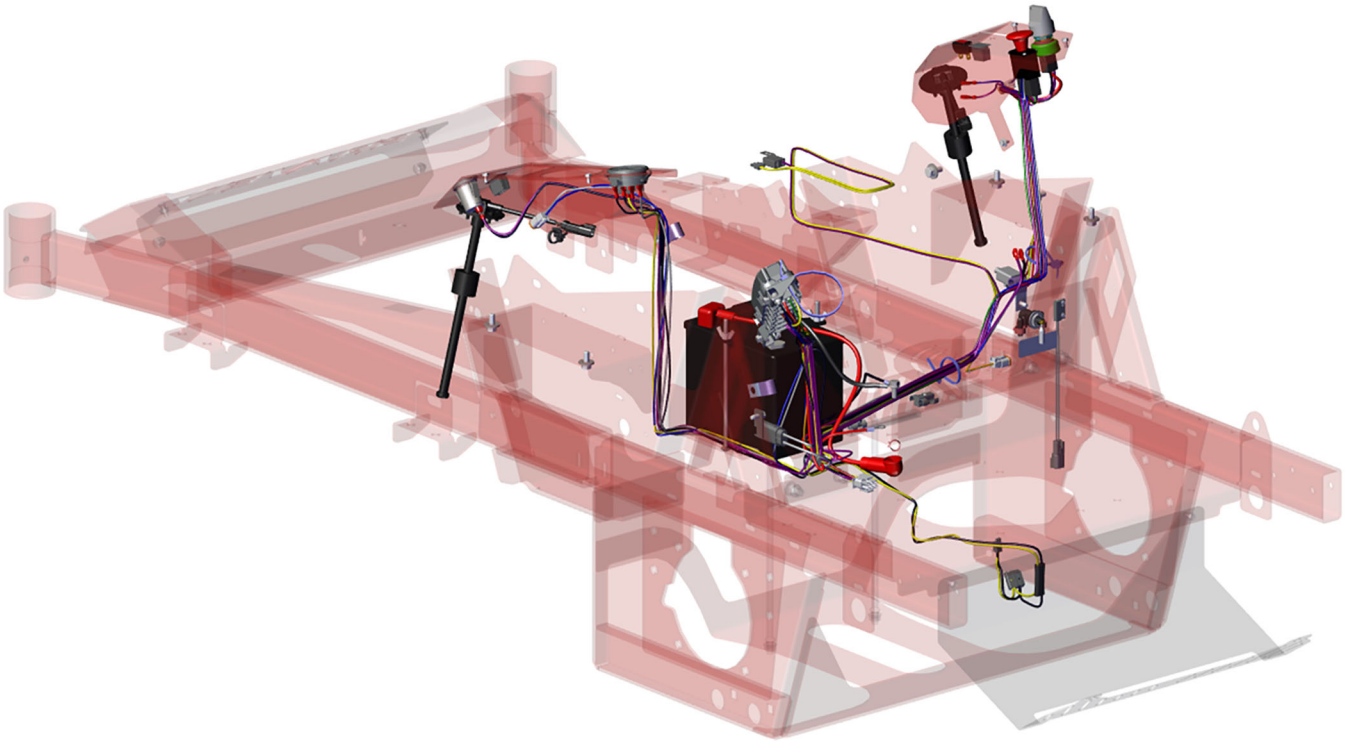

# Electrical Diagnostics

## Pro-Turn 600

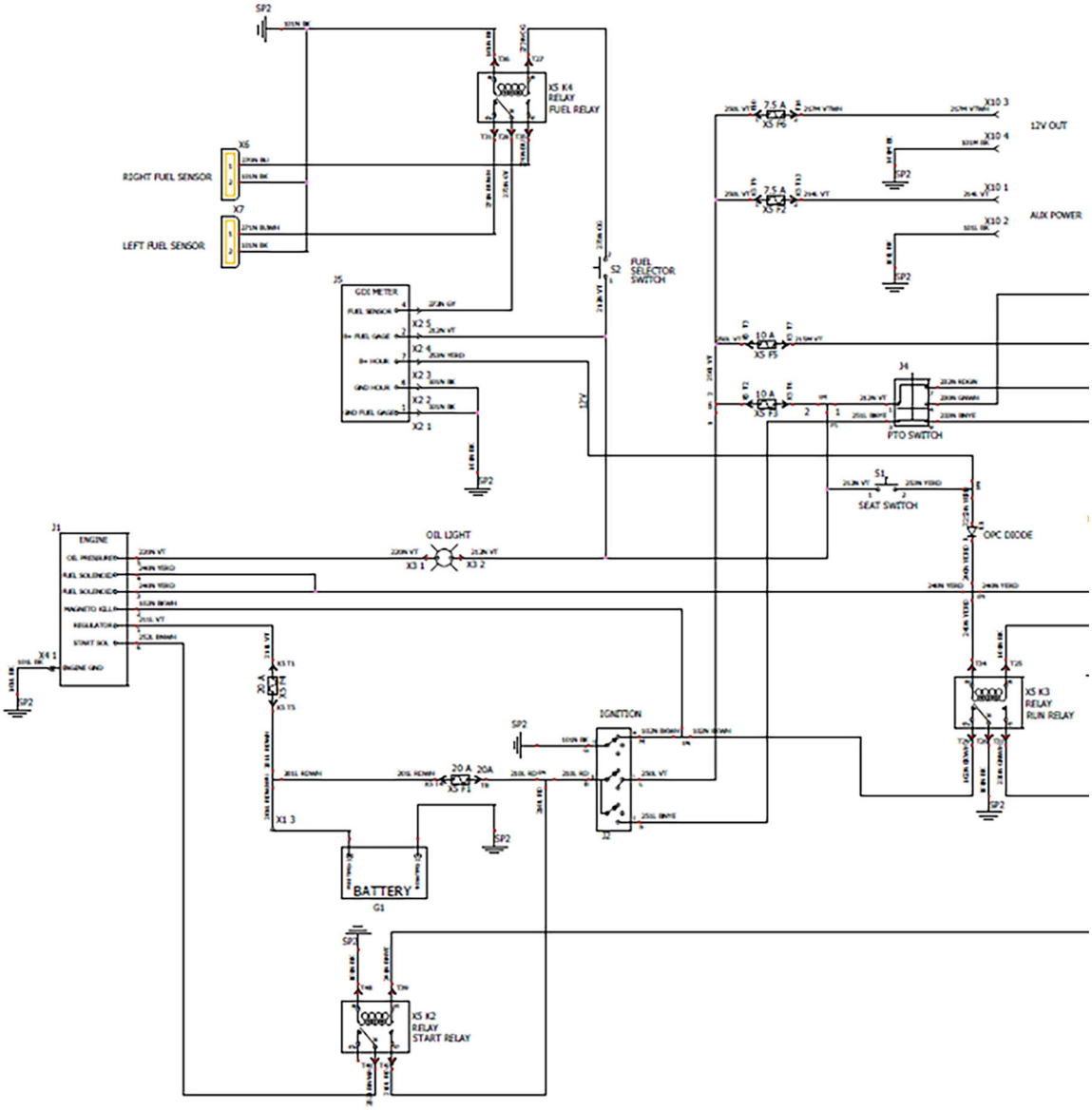

# Learning Objectives

After completing this lesson, you will...

- Understand diagnostic bench testing of any individual electrical components.
- Verifying ground circuits and understanding voltage drop in the harness.
- Know how to conduct electrical diagnostics on the wire harness based on a variety of electrical issues.

# Voltage Drop

- Always confirm battery voltage first as a starting reference. Conduct a load test.
- Natural Voltage Drop: gradual reduction in voltage that occurs in the electrical circuit/components due to natural resistance in the circuit.
- Induced Voltage Drop: reduction in voltage that occurs in the circuit/components due to corrosion, damaged wires, and burnt contacts. This will cause voltage readings from the harness to reduce in higher amounts.
- Voltage drop tests can be effective in diagnosing electrical issues.

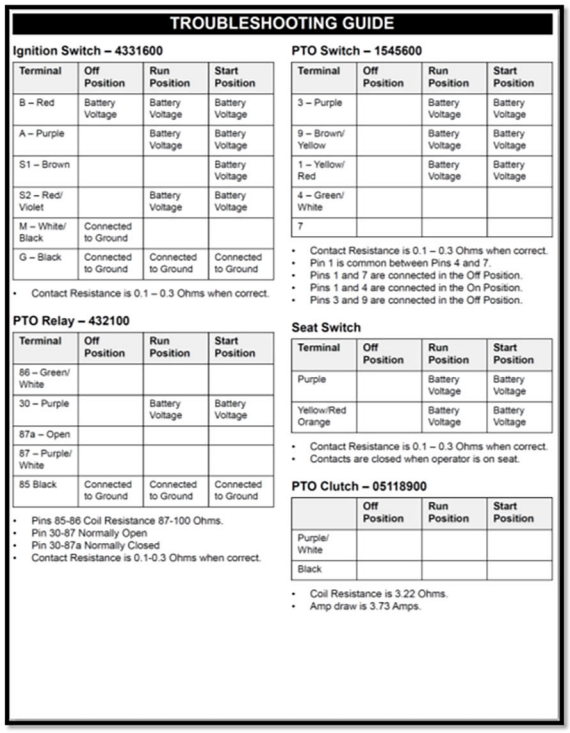

**TROUBLESHOOTING GUIDE**

**Ignition Switch – 4331600**

| Terminal | Off Position | Run Position | Start Position |
|---|---|---|---|
| B – Red | Battery Voltage | Battery Voltage | Battery Voltage |
| A – Purple | | Battery Voltage | Battery Voltage |
| S1 – Brown | | | Battery Voltage |
| S2 – Red/ Violet | | Battery Voltage | Battery Voltage |
| M – White/ Black | Connected to Ground | | |
| G – Black | Connected to Ground | Connected to Ground | Connected to Ground |

- Contact Resistance is 0.1 – 0.3 Ohms when correct.

**PTO Relay – 432100**

| Terminal | Off Position | Run Position | Start Position |
|---|---|---|---|
| 86 – Green/ White | | | |
| 30 – Purple | | Battery Voltage | Battery Voltage |
| 87a – Open | | | |
| 87 – Purple/ White | | | |
| 85 Black | Connected to Ground | Connected to Ground | Connected to Ground |

- Pins 85-86 Coil Resistance 87-100 Ohms.
- Pin 30-87 Normally Open
- Pin 30-87a Normally Closed
- Contact Resistance is 0.1-0.3 Ohms when correct.

**PTO Switch – 1545600**

| Terminal | Off Position | Run Position | Start Position |
|---|---|---|---|
| 3 – Purple | | Battery Voltage | Battery Voltage |
| 9 – Brown/ Yellow | | Battery Voltage | Battery Voltage |
| 1 – Yellow/ Red | | Battery Voltage | Battery Voltage |
| 4 – Green/ White | | | |
| 7 | | | |

- Contact Resistance is 0.1 – 0.3 Ohms when correct.
- Pin 1 is common between Pins 4 and 7.
- Pins 1 and 7 are connected in the Off Position.
- Pins 1 and 4 are connected in the On Position.
- Pins 3 and 9 are connected in the Off Position.

**Seat Switch**

| Terminal | Off Position | Run Position | Start Position |
|---|---|---|---|
| Purple | | Battery Voltage | Battery Voltage |
| Yellow/Red Orange | | Battery Voltage | Battery Voltage |

- Contact Resistance is 0.1 – 0.3 Ohms when correct.
- Contacts are closed when operator is on seat.

**PTO Clutch – 05118900**

| | Off Position | Run Position | Start Position |
|---|---|---|---|
| Purple/ White | | | |
| Black | | | |

- Coil Resistance is 3.22 Ohms.
- Amp draw is 3.73 Amps.

# Verifying Ground Connection

- Identify the ground circuit you want to test.
- Key Switch in the Off Position.
- Multimeter on Continuity test setting.
- Red probe to the contact of the electrical component you want to test (for example, fuse block contact for pin 85 of any Relay).
- Black probe on the main ground contact on the engine block or negative battery terminal.
  - Pro-Turn 600 main ground is located directly above the Starter Solenoid.
- You should hear an audible beep to verify a good ground. If there is no beep/OL is present on the meter, you have a bad ground wire.

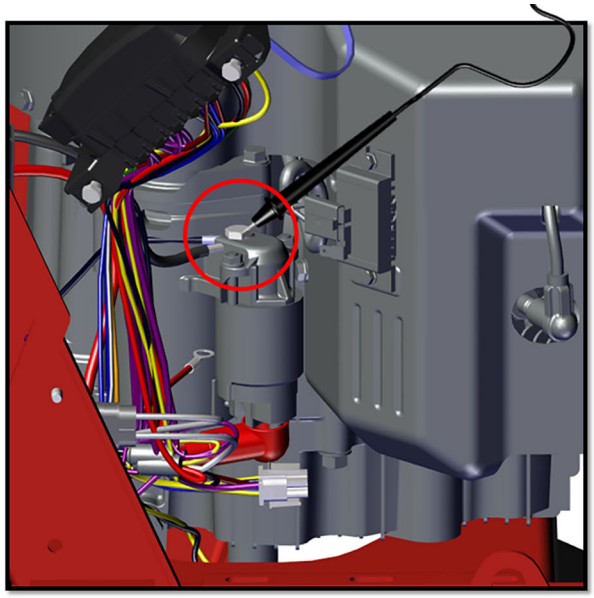

# Relay Bench Test

- Isolated from the harness, the coil should read 85 – 100 ohms.
- Resistance at 87A and 30 should be 0.0 – 0.3 ohms.
- Supply voltage to listen for activation.
- With 12 volts at coil, resistance at 87 and 30 should be 0.0 – 0.3 ohms.

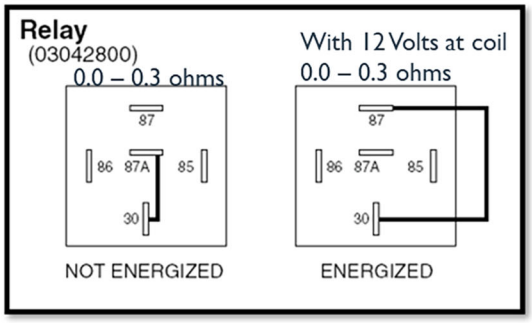


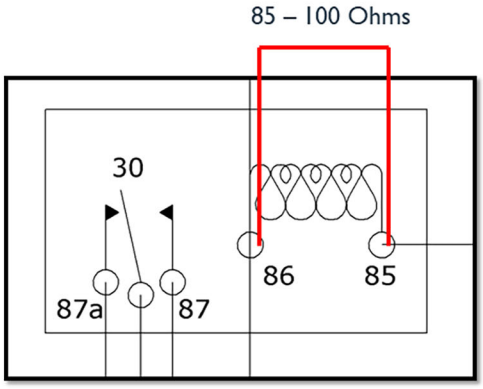


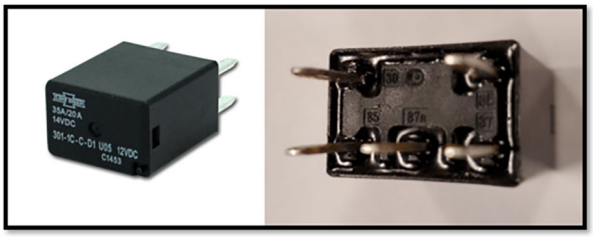

# PTO Switch Bench Test

- Isolate PTO Switch from wire harness.
- Resistance Testing: all should read between 0.0 – 0.3 for clean contacts.
- PTO Disengaged
  - Test from Pins 1 and 7
  - Test from Pins 3 and 9
- PTO Engaged
  - Test from Pins 1 and 4
- Verify open circuits between pins in both positions.



Disengaged

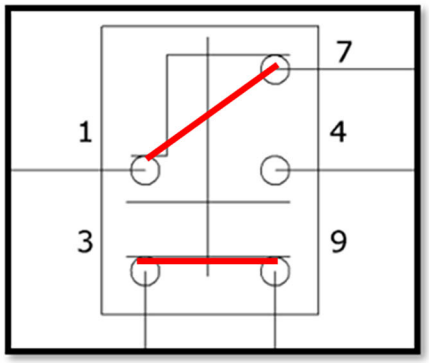


Engaged

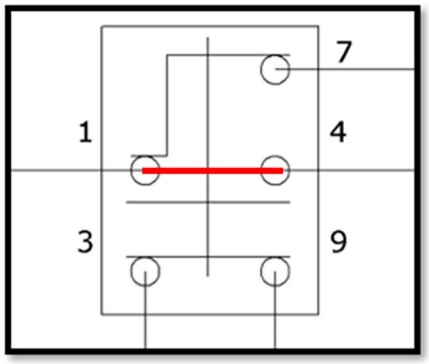


# Fuel Sender Bench Test

- Set multimeter to check resistance(Ohm).
- Use back-probes to test both wires on backside of Deutsch connector.
- The resistance ranges
  - Empty: 237-250 Ohm
  - Full: 28-33 Ohm
- Sweep the float across the sender and check for a consistent resistance interval range.
- You should not see fluctuations in the resistance reading such as OL, Mega-Ohms, or low Ohm.

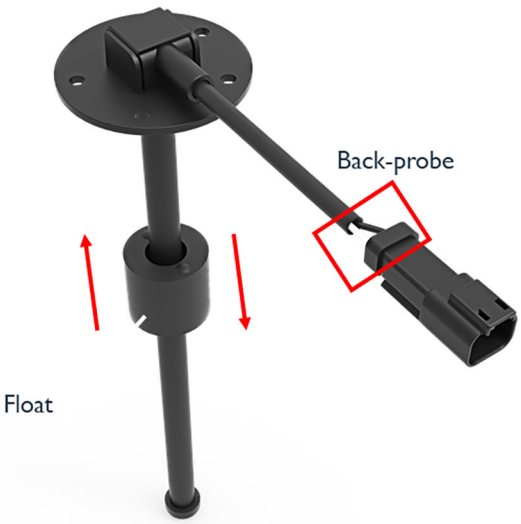

# Fuse Block

- Located behind the operator seat on the left side of the engine.
- Easily accessible for electrical diagnostics.
- Fuse Block Decal is located under the cover.
- Six fuses and four relays.
- Early models did not have 20 in fuse block

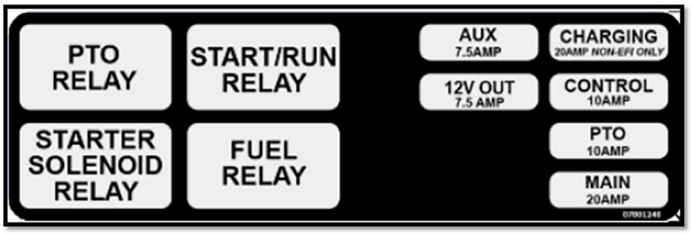


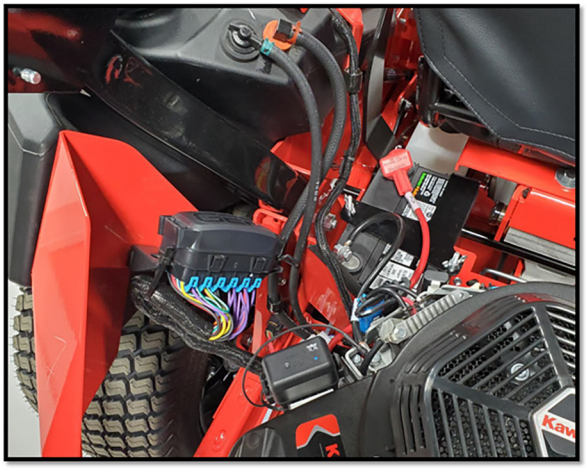

# EFI Adapter Overview

- Used only on models with EFI engines (992503, 992504)
- Purpose is to integrate electrical connections between:
  - Main harness – Engine harness
  - Engine harness – MIL light
  - Engine harness – Oil light
  - Engine harness – Throttle control
- Main source of power to the EFI components on engine.

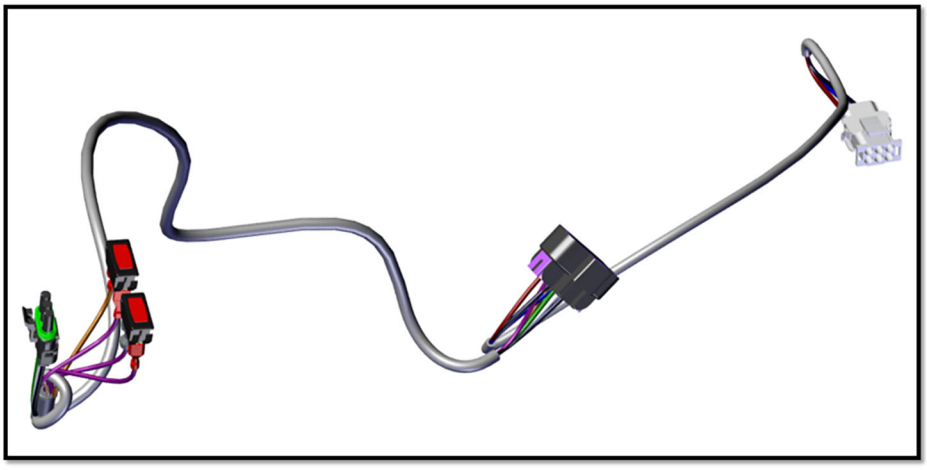

# EFI Adapter Overview Continued

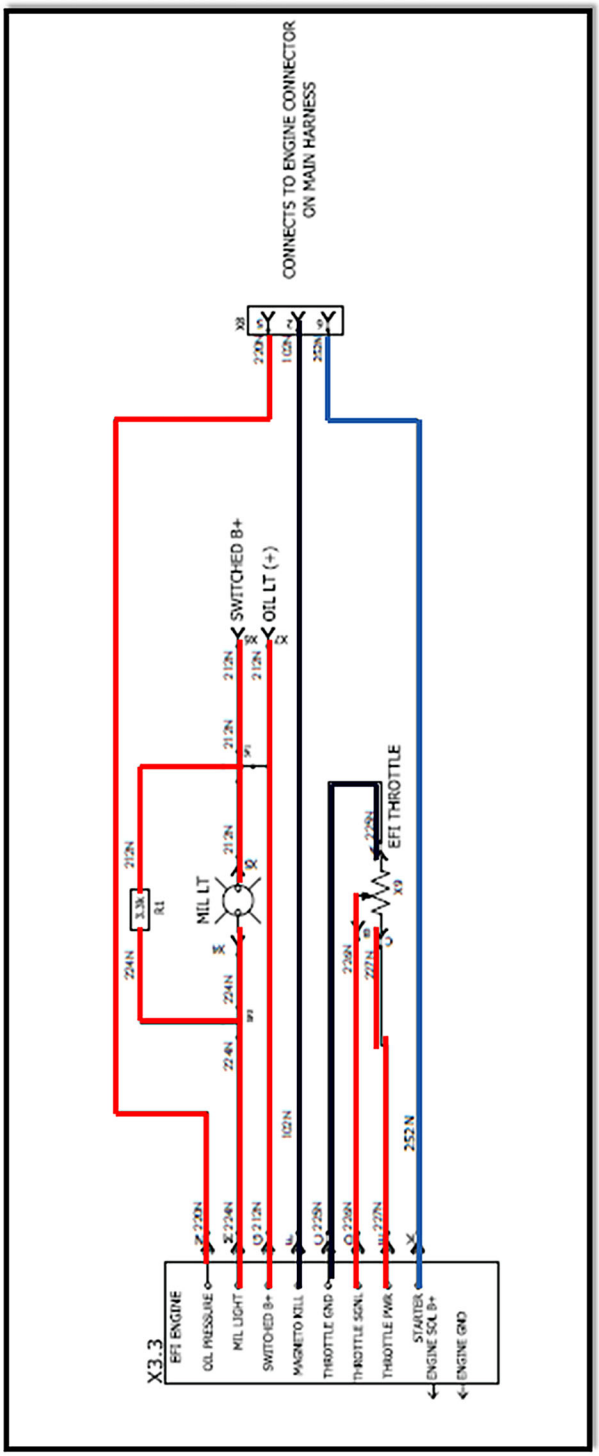
CONNECTS TO ENGINE CONNECTOR ON MAIN HARNESS
X8
220N
102N
252N
SWITCHED B+
OIL LT (+)
212N
MIL LT
X2
X1
X3
X4
X5
X6
X7
X9
X10
X11
X12
X13
X14
X15
X16
X17
X18
X19
X20
X21
X22
X23
X24
X25
X26
X27
X28
X29
X30
X31
X32
X33
X34
X35
X36
X37
X38
X39
X40
X41
X42
X43
X44
X45
X46
X47
X48
X49
X50
X51
X52
X53
X54
X55
X56
X57
X58
X59
X60
X61
X62
X63
X64
X65
X66
X67
X68
X69
X70
X71
X72
X73
X74
X75
X76
X77
X78
X79
X80
X81
X82
X83
X84
X85
X86
X87
X88
X89
X90
X91
X92
X93
X94
X95
X96
X97
X98
X99
X100
X101
X102
X103
X104
X105
X106
X107
X108
X109
X110
X111
X112
X113
X114
X115
X116
X117
X118
X119
X120
X121
X122
X123
X124
X125
X126
X127
X128
X129
X130
X131
X132
X133
X134
X135
X136
X137
X138
X139
X140
X141
X142
X143
X144
X145
X146
X147
X148
X149
X150
X151
X152
X153
X154
X155
X156
X157
X158
X159
X160
X161
X162
X163
X164
X165
X166
X167
X168
X169
X170
X171
X172
X173
X174
X175
X176
X177
X178
X179
X180
X181
X182
X183
X184
X185
X186
X187
X188
X189
X190
X191
X192
X193
X194
X195
X196
X197
X198
X199
X200
X201
X202
X203
X204
X205
X206
X207
X208
X209
X210
X211
X212
X213
X214
X215
X216
X217
X218
X219
X220
X221
X222
X223
X224
X225
X226
X227
X228
X229
X230
X231
X232
X233
X234
X235
X236
X237
X238
X239
X240
X241
X242
X243
X244
X245
X246
X247
X248
X249
X250
X251
X252
X253
X254
X255
X256
X257
X258
X259
X260
X261
X262
X263
X264
X265
X266
X267
X268
X269
X270
X271
X272
X273
X274
X275
X276
X277
X278
X279
X280
X281
X282
X283
X284
X285
X286
X287
X288
X289
X290
X291
X292
X293
X294
X295
X296
X297
X298
X299
X300
X301
X302
X303
X304
X305
X306
X307
X308
X309
X310
X311
X312
X313
X314
X315
X316
X317
X318
X319
X320
X321
X322
X323
X324
X325
X326
X327
X328
X329
X330
X331
X332
X333
X334
X335
X336
X337
X338
X339
X340
X341
X342
X343
X344
X345
X346
X347
X348
X349
X350
X351
X352
X353
X354
X355
X356
X357
X358
X359
X360
X361
X362
X363
X364
X365
X366
X367
X368
X369
X370
X371
X372
X373
X374
X375
X376
X377
X378
X379
X380
X381
X382
X383
X384
X385
X386
X387
X388
X389
X390
X391
X392
X393
X394
X395
X396
X397
X398
X399
X400
X401
X402
X403
X404
X405
X406
X407
X408
X409
X410
X411
X412
X413
X414
X415
X416
X417
X418
X419
X420
X421
X422
X423
X424
X425
X426
X427
X428
X429
X430
X431
X432
X433
X434
X435
X436
X437
X438
X439
X440
X441
X442
X443
X444
X445
X446
X447
X448
X449
X450
X451
X452
X453
X454
X455
X456
X457
X458
X459
X460
X461
X462
X463
X464
X465
X466
X467
X468
X469
X470
X471
X472
X473
X474
X475
X476
X477
X478
X479
X480
X481
X482
X483
X484
X485
X486
X487
X488
X489
X490
X491
X492
X493
X494
X495
X496
X497
X498
X499
X500
X501
X502
X503
X504
X505
X506
X507
X508
X509
X510
X511
X512
X513
X514
X515
X516
X517
X518
X519
X520
X521
X522
X523
X524
X525
X526
X527
X528
X529
X530
X531
X532
X533
X534
X535
X536
X537
X538
X539
X540
X541
X542
X543
X544
X545
X546
X547
X548
X549
X550
X551
X552
X553
X554
X555
X556
X557
X558
X559
X560
X561
X562
X563
X564
X565
X566
X567
X568
X569
X570
X571
X572
X573
X574
X575
X576
X577
X578
X579
X580
X581
X582
X583
X584
X585
X586
X587
X588
X589
X590
X591
X592
X593
X594
X595
X596
X597
X598
X599
X600
X601
X602
X603
X604
X605
X606
X607
X608
X609
X610
X611
X612
X613
X614
X615
X616
X617
X618
X619
X620
X621
X622
X623
X624
X625
X626
X627
X628
X629
X630
X631
X632
X633
X634
X635
X636
X637
X638
X639
X640
X641
X642
X643
X644
X645
X646
X647
X648
X649
X650
X651
X652
X653
X654
X655
X656
X657
X658
X659
X660
X661
X662
X663
X664
X665
X666
X667
X668
X669
X670
X671
X672
X673
X674
X675
X676
X677
X678
X679
X680
X681
X682
X683
X684
X685
X686
X687
X688
X689
X690
X691
X692
X693
X694
X695
X696
X697
X698
X699
X700
X701
X702
X703
X704
X705
X706
X707
X708
X709
X710
X711
X712
X713
X714
X715
X716
X717
X718
X719
X720
X721
X722
X723
X724
X725
X726
X727
X728
X729
X730
X731
X732
X733
X734
X735
X736
X737
X738
X739
X740
X741
X742
X743
X744
X745
X746
X747
X748
X749
X750
X751
X752
X753
X754
X755
X756
X757
X758
X759
X760
X761
X762
X763
X764
X765
X766
X767
X768
X769
X770
X771
X772
X773
X774
X775
X776
X777
X778
X779
X780
X781
X782
X783
X784
X785
X786
X787
X788
X789
X790
X791
X792
X793
X794
X795
X796
X797
X798
X799
X800
X801
X802
X803
X804
X805
X806
X807
X808
X809
X810
X811
X812
X813
X814
X815
X816
X817
X818
X819
X820
X821
X822
X823
X824
X825
X826
X827
X828
X829
X830
X831
X832
X833
X834
X835
X836
X837
X838
X839
X840
X841
X842
X843
X844
X845
X846
X847
X848
X849
X850
X851
X852
X853
X854
X855
X856
X857
X858
X859
X860
X861
X862
X863
X864
X865
X866
X867
X868
X869
X870
X871
X872
X873
X874
X875
X876
X877
X878
X879
X880
X881
X882
X883
X884
X885
X886
X887
X888
X889
X890
X891
X892
X893
X894
X895
X896
X897
X898
X899
X900
X901
X902
X903
X904
X905
X906
X907
X908
X909
X910
X911
X912
X913
X914
X915
X916
X917
X918
X919
X920
X921
X922
X923
X924
X925
X926
X927
X928
X929
X930
X931
X932
X933
X934
X935
X936
X937
X938
X939
X940
X941
X942
X943
X944
X945
X946
X947
X948
X949
X950
X951
X952
X953
X954
X955
X956
X957
X958
X959
X960
X961
X962
X963
X964
X965
X966
X967
X968
X969
X970
X971
X972
X973
X974
X975
X976
X977
X978
X979
X980
X981
X982
X983
X984
X985
X986
X987
X988
X989
X990
X991
X992
X993
X994
X995
X996
X997
X998
X999
X1000
X1001
X1002
X1003
X1004
X1005
X1006
X1007
X1008
X1009
X1010
X1011
X1012
X1013
X1014
X1015
X1016
X1017
X1018
X1019
X1020
X1021
X1022
X1023
X1024
X1025
X1026
X1027
X1028
X1029
X1030
X1031
X1032
X1033
X1034
X1035
X1036
X1037
X1038
X1039
X1040
X1041
X1042
X1043
X1044
X1045
X1046
X1047
X1048
X1049
X1050
X1051
X1052
X1053
X1054
X1055
X1056
X1057
X1058
X1059
X1060
X1061
X1062
X1063
X1064
X1065
X1066
X1067
X1068
X1069
X1070
X1071
X1072
X1073
X1074
X1075
X1076
X1077
X1078
X1079
X1080
X1081
X1082
X1083
X1084
X1085
X1086
X1087
X1088
X1089
X1090
X1091
X1092
X1093
X1094
X1095
X1096
X1097
X1098
X1099
X1100
X1101
X1102
X1103
X1104
X1105
X1106
X1107
X1108
X1109
X1110
X1111
X1112
X1113
X1114
X1115
X1116
X1117
X1118
X1119
X1120
X1121
X1122
X1123
X1124
X1125
X1126
X1127
X1128
X1129
X1130
X1131
X1132
X1133
X1134
X1135
X1136
X1137
X1138
X1139
X1140
X1141
X1142
X1143
X1144
X1145
X1146
X1147
X1148
X1149
X1150
X1151
X1152
X1153
X1154
X1155
X1156
X1157
X1158
X1159
X1160
X1161
X1162
X1163
X1164
X1165
X1166
X1167
X1168
X1169
X1170
X1171
X1172
X1173
X1174
X1175
X1176
X1177
X1178
X1179
X1180
X1181
X1182
X1183
X1184
X1185
X1186
X1187
X1188
X1189
X1190
X1191
X1192
X1193
X1194
X1195
X1196
X1197
X1198
X1199
X1200
X1201
X1202
X1203
X1204
X1205
X1206
X1207
X1208
X1209
X1210
X1211
X1212
X1213
X1214
X1215
X1216
X1217
X1218
X1219
X1220
X1221
X1222
X1223
X1224
X1225
X1226
X1227
X1228
X1229
X1230
X1231
X1232
X1233
X1234
X1235
X1236
X1237
X1238
X1239
X1240
X1241
X1242
X1243
X1244
X1245
X1246
X1247
X1248
X1249
X1250
X1251
X1252
X1253
X1254
X1255
X1256
X1257
X1258
X1259
X1260
X1261
X1262
X1263
X1264
X1265
X1266
X1267
X1268
X1269
X1270
X1271
X1272
X1273
X1274
X1275
X1276
X1277
X1278
X1279
X1280
X1281
X1282
X1283
X1284
X1285
X1286
X1287
X1288
X1289
X1290
X1291
X1292
X1293
X1294
X1295
X1296
X1297
X1298
X1299
X1300
X1301
X1302
X1303
X1304
X1305
X1306
X1307
X1308
X1309
X1310
X1311
X1312
X1313
X1314
X1315
X1316
X1317
X1318
X1319
X1320
X1321
X1322
X1323
X1324
X1325
X1326
X1327
X1328
X1329
X1330
X1331
X1332
X1333
X1334
X1335
X1336
X1337
X1338
X1339
X1340
X1341
X1342
X1343
X1344
X1345
X1346
X1347
X1348
X1349
X1350
X1351
X1352
X1353
X1354
X1355
X1356
X1357
X1358
X1359
X1360
X1361
X1362
X1363
X1364
X1365
X1366
X1367
X1368
X1369
X1370
X1371
X1372
X1373
X1374
X1375
X1376
X1377
X1378
X1379
X1380
X1381
X1382
X1383
X1384
X1385
X1386
X1387
X1388
X1389
X1390
X1391
X1392
X1393
X1394
X1395
X1396
X1397
X1398
X1399
X1400
X1401
X1402
X1403
X1404
X1405
X1406
X1407
X1408
X1409
X1410
X1411
X1412
X1413
X1414
X1415
X1416
X1417
X1418
X1419
X1420
X1421
X1422
X1423
X1424
X1425
X1426
X1427
X1428
X1429
X1430
X1431
X1432
X1433
X1434
X1435
X1436
X1437
X1438
X1439
X1440
X1441
X1442
X1443
X1444
X1445
X1446
X1447
X1448
X1449
X1450
X1451
X1452
X1453
X1454
X1455
X1456
X1457
X1458
X1459
X1460
X1461
X1462
X1463
X1464
X1465
X1466
X1467
X1468
X1469
X1470
X1471
X1472
X1473
X1474
X1475
X1476
X1477
X1478
X1479
X1480
X1481
X1482
X1483
X1484
X1485
X1486
X1487
X1488
X1489
X1490
X1491
X1492
X1493
X1494
X1495
X1496
X1497
X1498
X1499
X1500
X1501
X1502
X1503
X1504
X1505
X1506
X1507
X1508
X1509
X1510
X1511
X1512
X1513
X1514
X1515
X1516
X1517
X1518
X1519
X1520
X1521
X1522
X1523
X1524
X1525
X1526
X1527
X1528
X1529
X1530
X1531
X1532
X1533
X1534
X1535
X1536
X1537
X1538
X1539
X1540
X1541
X1542
X1543
X1544
X1545
X1546
X1547
X1548
X1549
X1550
X1551
X1552
X1553
X1554
X1555
X1556
X1557
X1558
X1559
X1560
X1561
X1562
X1563
X1564
X1565
X1566
X1567
X1568
X1569
X1570
X1571
X1572
X1573
X1574
X1575
X1576
X1577
X1578
X1579
X1580
X1581
X1582
X1583
X1584
X1585
X1586
X1587
X1588
X1589
X1590
X1591
X1592
X1593
X1594
X1595
X1596
X1597
X1598
X1599
X1600
X1601
X1602
X1603
X1604
X1605
X1606
X1607
X1608
X1609
X1610
X1611
X1612
X1613
X1614
X1615
X1616
X1617
X1618
X1619
X1620
X1621
X1622
X1623
X1624
X1625
X1626
X1627
X1628
X1629
X1630
X1631
X1632
X1633
X1634
X1635
X1636
X1637
X1638
X1639
X1640
X1641
X1642
X1643
X1644
X1645
X1646
X1647
X1648
X1649
X1650
X1651
X1652
X1653
X1654
X1655
X1656
X1657
X1658
X1659
X1660
X1661
X1662
X1663
X1664
X1665
X1666
X1667
X1668
X1669
X1670
X1671
X1672
X1673
X1674
X1675
X1676
X1677
X1678
X1679
X1680
X1681
X1682
X1683
X1684
X1685
X1686
X1687
X1688
X1689
X1690
X1691
X1692
X1693
X1694
X1695
X1696
X1697
X1698
X1699
X1700
X1701
X1702
X1703
X1704
X1705
X1706
X1707
X1708
X1709
X1710
X1711
X1712
X1713
X1714
X1715
X1716
X1717
X1718
X1719
X1720
X1721
X1722
X1723
X1724
X1725
X1726
X1727
X1728
X1729
X1730
X1731
X1732
X1733
X1734
X1735
X1736
X1737
X1738
X1739
X1740
X1741
X1742
X1743
X1744
X1745
X1746
X1747
X1748
X1749
X1750
X1751
X1752
X1753
X1754
X1755
X1756
X1757
X1758
X1759
X1760
X1761
X1762
X1763
X1764
X1765
X1766
X1767
X1768
X1769
X1770
X1771
X1772
X1773
X1774
X1775
X1776
X1777
X1778
X1779
X1780
X1781
X1782
X1783
X1784
X1785
X1786
X1787
X1788
X1789
X1790
X1791
X1792
X1793
X1794
X1795
X1796
X1797
X1798
X1799
X1800
X1801
X1802
X1803
X1804
X1805
X1806
X1807
X1808
X1809
X1810
X1811
X1812
X1813
X1814
X1815
X1816
X1817
X1818
X1819
X1820
X1821
X1822
X1823
X1824
X1825
X1826
X1827
X1828
X1829
X1830
X1831
X1832
X1833
X1834
X1835
X1836
X1837
X1838
X1839
X1840
X1841
X1842
X1843
X1844
X1845
X1846
X1847
X1848
X1849
X1850
X1851
X1852
X1853
X1854
X1855
X1856
X1857
X1858
X1859
X1860
X1861
X1862
X1863
X1864
X1865
X1866
X1867
X1868
X1869
X1870
X1871
X1872
X1873
X1874
X1875
X1876
X1877
X1878
X1879
X1880
X1881
X1882
X1883
X1884
X1885
X1886
X1887
X1888
X1889
X1890
X1891
X1892
X1893
X1894
X1895
X1896
X1897
X1898
X1899
X1900
X1901
X1902
X1903
X1904
X1905
X1906
X1907
X1908
X1909
X1910
X1911
X1912
X1913
X1914
X1915
X1916
X1917
X1918
X1919
X1920
X1921
X1922
X1923
X1924
X1925
X1926
X1927
X1928
X1929
X1930
X1931
X1932
X1933
X1934
X1935
X1936
X1937
X1938
X1939
X1940
X1941
X1942
X1943
X1944
X1945
X1946
X1947
X1948
X1949
X1950
X1951
X1952
X1953
X1954
X1955
X1956
X1957
X1958
X1959
X1960
X1961
X1962
X1963
X1964
X1965
X1966
X1967
X1968
X1969
X1970
X1971
X1972
X1973
X1974
X1975
X1976
X1977
X1978
X1979
X1980
X1981
X1982
X1983
X1984
X1985
X1986
X1987
X1988
X1989
X1990
X1991
X1992
X1993
X1994
X1995
X1996
X1997
X1998
X1999
X2000
X2001
X2002
X2003
X2004
X2005
X2006
X2007
X2008
X2009
X2010
X2011
X2012
X2013
X2014
X2015
X2016
X2017
X2018
X2019
X2020
X2021
X2022
X2023
X2024
X2025
X2026
X2027
X2028
X2029
X2030
X2031
X2032
X2033
X2034
X2035
X2036
X2037
X2038
X2039
X2040
X2041
X2042
X2043
X2044
X2045
X2046
X2047
X2048
X2049
X2050
X2051
X2052
X2053
X2054
X2055
X2056
X2057
X2058
X2059
X2060
X2061
X2062
X2063
X2064
X2065
X2066
X2067
X2068
X2069
X2070
X2071
X2072
X2073
X2074
X2075
X2076
X2077
X2078
X2079
X2080
X2081
X2082
X2083
X2084
X2085
X2086
X2087
X2088
X2089
X2090
X2091
X2092
X2093
X2094
X2095
X2096
X2097
X2098
X2099
X2100
X2101
X2102
X2103
X2104
X2105
X2106
X2107
X2108
X2109
X2110
X2111
X2112
X2113
X2114
X2115
X2116
X2117
X2118
X2119
X2120
X2121
X2122
X2123
X2124
X2125
X2126
X2127
X2128
X2129
X2130
X2131
X2132
X2133
X2134
X2135
X2136
X2137
X2138
X2139
X2140
X2141
X2142
X2143
X2144
X2145
X2146
X2147
X2148
X2149
X2150
X2151
X2152
X2153
X2154
X2155
X2156
X2157
X2158
X2159
X2160
X2161
X2162
X2163
X2164
X2165
X2166
X2167
X2168
X2169
X2170
X2171
X2172
X2173
X2174
X2175
X2176
X2177
X2178
X2179
X2180
X2181
X2182
X2183
X2184
X2185
X2186
X2187
X2188
X2189
X2190
X2191
X2192
X2193
X2194
X2195
X2196
X2197
X2198
X2199
X2200
X2201
X2202
X2203
X2204
X2205
X2206
X2207
X2208
X2209
X2210
X2211
X2212
X2213
X2214
X2215
X2216
X2217
X2218
X2219
X2220
X2221
X2222
X2223
X2224
X2225
X2226
X2227
X2228
X2229
X2230
X2231
X2232
X2233
X2234
X2235
X2236
X2237
X2238
X2239
X2240
X2241
X2242
X2243
X2244
X2245
X2246
X2247
X2248
X2249
X2250
X2251
X2252
X2253
X2254
X2255
X2256
X2257
X2258
X2259
X2260
X2261
X2262
X2263
X2264
X2265
X2266
X2267
X2268
X2269
X2270
X2271
X2272
X2273
X2274
X2275
X2276
X2277
X2278
X2279
X2280
X2281
X2282
X2283
X2284
X2285
X2286
X2287
X2288
X2289
X2290
X2291
X2292
X2293
X2294
X2295
X2296
X2297
X2298
X2299
X2300
X2301
X2302
X2303
X2304
X2305
X2306
X2307
X2308
X2309
X2310
X2311
X2312
X2313
X2314
X2315
X2316
X2317
X2318
X2319
X2320
X2321
X2322
X2323
X2324
X2325
X2326
X2327
X2328
X2329
X2330
X2331
X2332
X2333
X2334
X2335
X2336
X2337
X2338
X2339
X2340
X2341
X2342
X2343
X2344
X2345
X2346
X2347
X2348
X2349
X2350
X2351
X2352
X2353
X2354
X2355
X2356
X2357
X2358
X2359
X2360
X2361
X2362
X2363
X2364
X2365
X2366
X2367
X2368
X2369
X2370
X2371
X2372
X2373
X2374
X2375
X2376
X2377
X2378
X2379
X2380
X2381
X2382
X2383
X2384
X2385
X2386
X2387
X2388
X2389
X2390
X2391
X2392
X2393
X2394
X2395
X2396
X2397
X2398
X2399
X2400
X2401
X2402
X2403
X2404
X2405
X2406
X2407
X2408
X2409
X2410
X2411
X2412
X2413
X2414
X2415
X2416
X2417
X2418
X2419
X2420
X2421
X2422
X2423
X2424
X2425
X2426
X2427
X2428
X2429
X2430
X2431
X2432
X2433
X2434
X2435
X2436
X2437
X2438
X2439
X2440
X2441
X2442
X2443
X2444
X2445
X2446
X2447
X2448
X2449
X2450
X2451
X2452
X2453
X2454
X2455
X2456
X2457
X2458
X2459
X2460
X2461
X2462
X2463
X2464
X2465
X2466
X2467
X2468
X2469
X2470
X2471
X2472
X2473
X2474
X2475
X2476
X2477
X2478
X2479
X2480
X2481
X2482
X2483
X2484
X2485
X2486
X2487
X2488
X2489
X2490
X2491
X2492
X2493
X2494
X2495
X2496
X2497
X2498
X2499
X2500
X2501
X2502
X2503
X2504
X2505
X2506
X2507
X2508
X2509
X2510
X2511
X2512
X2513
X2514
X2515
X2516
X2517
X2518
X2519
X2520
X2521
X2522
X2523
X2524
X2525
X2526
X2527
X2528
X2529
X2530
X2531
X2532
X2533
X2534
X2535
X2536
X2537
X2538
X2539
X2540
X2541
X2542
X2543
X2544
X2545
X2546
X2547
X2548
X2549
X2550
X2551
X2552
X2553
X2554
X2555
X2556
X2557
X2558
X2559
X2560
X2561
X2562
X2563
X2564
X2565
X2566
X2567
X2568
X2569
X2570
X2571
X2572
X2573
X2574
X2575
X2576
X2577
X2578
X2579
X2580
X2581
X2582
X2583
X2584
X2585
X2586
X2587
X2588
X2589
X2590
X2591
X2592
X2593
X2594
X2595
X2596
X2597
X2598
X2599
X2600
X2601
X2602
X2603
X2604
X2605
X2606
X2607
X2608
X2609
X2610
X2611
X2612
X2613
X2614
X2615
X2616
X2617
X2618
X2619
X2620
X2621
X2622
X2623
X2624
X2625
X2626
X2627
X2628
X2629
X2630
X2631
X2632
X2633
X2634
X2635
X2636
X2637
X2638
X2639
X2640
X2641
X2642
X2643
X2644
X2645
X2646
X2647
X2648
X2649
X2650
X2651
X2652
X2653
X2654
X2655
X2656
X2657
X2658
X2659
X2660
X2661
X2662
X2663
X2664
X2665
X2666
X2667
X2668
X2669
X2670
X2671
X2672
X2673
X2674
X2675
X2676
X2677
X2678
X2679
X2680
X2681
X2682
X2683
X2684
X2685
X2686
X2687
X2688
X2689
X2690
X2691
X2692
X2693
X2694
X2695
X2696
X2697
X2698
X2699
X2700
X2701
X2702
X2703
X2704
X2705
X2706
X2707
X2708
X2709
X2710
X2711
X2712
X2713
X2714
X2715
X2716
X2717
X2718
X2719
X2720
X2721
X2722
X2723
X2724
X2725
X2726
X2727
X2728
X2729
X2730
X2731
X2732
X2733
X2734
X2735
X2736
X2737
X2738
X2739
X2740
X2741
X2742
X2743
X2744
X2745
X2746
X2747
X2748
X2749
X2750
X2751
X2752
X2753
X2754
X2755
X2756
X2757
X2758
X2759
X2760
X2761
X2762
X2763
X2764
X2765
X2766
X2767
X2768
X2769
X2770
X2771
X2772
X2773
X2774
X2775
X2776
X2777
X2778
X2779
X2780
X2781
X2782
X2783
X2784
X2785
X2786
X2787
X2788
X2789
X2790
X2791
X2792
X2793
X2794
X2795
X2796
X2797
X2798
X2799
X2800
X2801
X2802
X2803
X2804
X2805
X2806
X2807
X2808
X2809
X2810
X2811
X2812
X2813
X2814
X2815
X2816
X2817
X2818
X2819
X2820
X2821
X2822
X2823
X2824
X2825
X2826
X2827
X2828
X2829
X2830
X2831
X2832
X2833
X2834
X2835
X2836
X2837
X2838
X2839
X2840
X2841
X2842
X2843
X2844
X2845
X2846
X2847
X2848
X2849
X2850
X2851
X2852
X2853
X2854
X2855
X2856
X2857
X2858
X2859
X2860
X2861
X2862
X2863
X2864
X2865
X2866
X2867
X2868
X2869
X2870
X2871
X2872
X2873
X2874
X2875
X2876
X2877
X2878
X2879
X2880
X2881
X2882
X2883
X2884
X2885
X2886
X2887
X2888
X2889
X2890
X2891
X2892
X2893
X2894
X2895
X2896
X2897
X2898
X2899
X2900
X2901
X2902
X2903
X2904
X2905
X2906
X2907
X2908
X2909
X2910
X2911
X2912
X2913
X2914
X2915
X2916
X2917
X2918
X2919
X2920
X2921
X2922
X2923
X2924
X2925
X2926
X2927
X2928
X2929
X2930
X2931
X2932
X2933
X2934
X2935
X2936
X2937
X2938
X2939
X2940
X2941
X2942
X2943
X2944
X2945
X2946
X2947
X2948
X2949
X2950
X2951
X2952
X2953
X2954
X2955
X2956
X2957
X2958
X2959
X2960
X2961
X2962
X2963
X2964
X2965
X2966
X2967
X2968
X2969
X2970
X2971
X2972
X2973
X2974
X2975
X2976
X2977
X2978
X2979
X2980
X2981
X2982
X2983
X2984
X2985
X2986
X2987
X2988
X2989
X2990
X2991
X2992
X2993
X2994
X2995
X2996
X2997
X2998
X2999
X3000
X3001
X3002
X3003
X3004
X3005
X3006
X3007
X3008
X3009
X3010
X3011
X3012
X3013
X3014
X3015
X3016
X3017
X3018
X3019
X3020
X3021
X3022
X3023
X3024
X3025
X3026
X3027
X3028
X3029
X3030
X3031
X3032
X3033
X3034
X3035
X3036
X3037
X3038
X3039
X3040
X3041
X3042
X3043
X3044
X3045
X3046
X3047
X3048
X3049
X3050
X3051
X3052
X3053
X3054
X3055
X3056
X3057
X3058
X3059
X3060
X3061
X3062
X3063
X3064
X3065
X3066
X3067
X3068
X3069
X3070
X3071
X3072
X3073
X3074
X3075
X3076
X3077
X3078
X3079
X3080
X3081
X3082
X3083
X3084
X3085
X3086
X3087
X3088
X3089
X3090
X3091
X3092
X3093
X3094
X3095
X3096
X3097
X3098
X3099
X3100
X3101
X3102
X3103
X3104
X3105
X3106
X3107
X3108
X3109
X3110
X3111
X3112
X3113
X3114
X3115
X3116
X3117
X3118
X3119
X3120
X3121
X3122
X3123
X3124
X3125
X3126
X3127
X3128
X3129
X3130
X3131
X3132
X3133
X3134
X3135
X3136
X3137
X3138
X3139
X3140
X3141
X3142
X3143
X3144
X3145
X3146
X3147
X3148
X3149
X3150
X3151
X3152
X3153
X3154
X3155
X3156
X3157
X3158
X3159
X3160
X3161
X3162
X3163
X3164
X3165
X3166
X3167
X3168
X3169
X3170
X3171
X3172
X3173
X3174
X3175
X3176
X3177
X3178
X3179
X3180
X3181
X3182
X3183
X3184
X3185
X3186
X3187
X3188
X3189
X3190
X3191
X3192
X3193
X3194
X3195
X3196
X3197
X3198
X3199
X3200
X3201
X3202
X3203
X3204
X3205
X3206
X3207
X3208
X3209
X3210
X3211
X3212
X3213
X3214
X3215
X3216
X3217
X3218
X3219
X3220
X3221
X3222
X3223
X3224
X3225
X3226
X3227
X3228
X3229
X3230
X3231
X3232
X3233
X3234
X3235
X3236
X3237
X3238
X3239
X3240
X3241
X3242
X3243
X3244
X3245
X3246
X3247
X3248
X3249
X3250
X3251
X3252
X3253
X3254
X3255
X3256
X3257
X3258
X3259
X3260
X3261
X3262
X3263
X3264
X3265
X3266
X3267
X3268
X3269
X3270
X3271
X3272
X3273
X3274
X3275
X3276
X3277
X3278
X3279
X3280
X3281
X3282
X3283
X3284
X3285
X3286
X3287
X3288
X3289
X3290
X3291
X3292
X3293
X3294
X3295
X3296
X3297
X3298
X3299
X3300
X3301
X3302
X3303
X3304
X3305
X3306
X3307
X3308
X3309
X3310
X3311
X3312
X3313
X3314
X3315
X3316
X3317
X3318
X3319
X3320
X3321
X3322
X3323
X3324
X3325
X3326
X3327
X3328
X3329
X3330
X3331
X3332
X3333
X3334
X3335
X3336
X3337
X3338
X3339
X3340
X3341
X3342
X3343
X3344
X3345
X3346
X3347
X3348
X3349
X3350
X3351
X3352
X3353
X3354
X3355
X3356
X3357
X3358
X3359
X3360
X3361
X3362
X3363
X3364
X3365
X3366
X3367
X3368
X3369
X3370
X3371
X3372
X3373
X3374
X3375
X3376
X3377
X3378
X3379
X3380
X3381
X3382
X3383
X3384
X3385
X3386
X3387
X3388
X3389
X3390
X3391
X3392
X3393
X3394
X3395
X3396
X3397
X3398
X3399
X3400
X3401
X3402
X3403
X3404
X3405
X3406
X3407
X3408
X3409
X3410
X3411
X3412
X3413
X3414
X3415
X3416
X3417
X3418
X3419
X3420
X3421
X3422
X3423
X3424
X3425
X3426
X3427
X3428
X3429
X3430
X3431
X3432
X3433
X3434
X3435
X3436
X3437
X3438
X3439
X3440
X3441
X3442
X3443
X3444
X3445
X3446
X3447
X3448
X3449
X3450
X3451
X3452
X3453
X3454
X3455
X3456
X3457
X3458
X3459
X3460
X3461
X3462
X3463
X3464
X3465
X3466
X3467
X3468
X3469
X3470
X3471
X3472
X3473
X3474
X3475
X3476
X3477
X3478
X3479
X3480
X3481
X3482
X3483
X3484
X3485
X3486
X3487
X3488
X3489
X3490
X3491
X3492
X3493
X3494
X3495
X3496
X3497
X3498
X3499
X3500
X3501
X3502
X3503
X3504
X3505
X3506
X3507
X3508
X3509
X3510
X3511
X3512
X3513
X3514
X3515
X3516
X3517
X3518
X3519
X3520
X3521
X3522
X3523
X3524
X3525
X3526
X3527
X3528
X3529
X3530
X3531
X3532
X3533
X3534
X3535
X3536
X3537
X3538
X3539
X3540
X3541
X3542
X3543
X3544
X3545
X3546
X3547
X3548
X3549
X3550
X3551
X3552
X3553
X3554
X3555
X3556
X3557
X3558
X3559
X3560
X3561
X3562
X3563
X3564
X3565
X3566
X3567
X3568
X3569
X3570
X3571
X3572
X3573
X3574
X3575
X3576
X3577
X3578
X3579
X3580
X3581
X3582
X3583
X3584
X3585
X3586
X3587
X3588
X3589
X3590
X3591
X3592
X3593
X3594
X3595
X3596
X3597
X3598
X3599
X3600
X3601
X3602
X3603
X3604
X3605
X3606
X3607
X3608
X3609
X3610
X3611
X3612
X3613
X3614
X3615
X3616
X3617
X3618
X3619
X3620
X3621
X3622
X3623
X3624
X3625
X3626
X3627
X3628
X3629
X3630
X3631
X3632
X3633
X3634
X3635
X3636
X3637
X3638
X3639
X3640
X3641
X3642
X3643
X3644
X3645
X3646
X3647
X3648
X3649
X3650
X3651
X3652
X3653
X3654
X3655
X3656
X3657
X3658
X3659
X3660
X3661
X3662
X3663
X3664
X3665
X3666
X3667
X3668
X3669
X3670
X3671
X3672
X3673
X3674
X3675
X3676
X3677
X3678
X3679
X3680
X3681
X3682
X3683
X3684
X3685
X3686
X3687
X3688
X3689
X3690
X3691
X3692
X3693
X3694
X3695
X3696
X3697
X3698
X3699
X3700
X3701
X3702
X3703
X3704
X3705
X3706
X3707
X3708
X3709
X3710
X3711
X3712
X3713
X3714
X3715
X3716
X3717
X3718
X3719
X3720
X3721
X3722
X3723
X3724
X3725
X3726
X3727
X3728
X3729
X3730
X3731
X3732
X3733
X3734
X3735
X3736
X3737
X3738
X3739
X3740
X3741
X3742
X3743
X3744
X3745
X3746
X3747
X3748
X3749
X3750
X3751
X3752
X3753
X3754
X3755
X3756
X3757
X3758
X3759
X3760
X3761
X3762
X3763
X3764
X3765
X3766
X3767
X3768
X3769
X3770
X3771
X3772
X3773
X3774
X3775
X3776
X3777
X3778
X3779
X3780
X3781
X3782
X3783
X3784
X3785
X3786
X3787
X3788
X3789
X3790
X3791
X3792
X3793
X3794
X3795
X3796
X3797
X3798
X3799
X3800
X3801
X3802
X3803
X3804
X3805
X3806
X3807
X3808
X3809
X3810
X3811
X3812
X3813
X3814
X3815
X3816
X3817
X3818
X3819
X3820
X3821
X3822
X3823
X3824
X3825
X3826
X3827
X3828
X3829
X3830
X3831
X3832
X3833
X3834
X3835
X3836
X3837
X3838
X3839
X3840
X3841
X3842
X3843
X3844
X3845
X3846
X3847
X3848
X3849
X3850
X3851
X3852
X3853
X3854
X3855
X3856
X3857
X3858
X3859
X3860
X3861
X3862
X3863
X3864
X3865
X3866
X3867
X3868
X3869
X3870
X3871
X3872
X3873
X3874
X3875
X3876
X3877
X3878
X3879
X3880
X3881
X3882
X3883
X3884
X3885
X3886
X3887
X3888
X3889
X3890
X3891
X3892
X3893
X3894
X3895
X3896
X3897
X3898
X3899
X3900
X3901
X3902
X3903
X3904
X3905
X3906
X3907
X3908
X3909
X3910
X3911
X3912
X3913
X3914
X3915
X3916
X3917
X3918
X3919
X3920
X3921
X3922
X3923
X3924
X3925
X3926
X3927
X3928
X3929
X3930
X3931
X3932
X3933
X3934
X3935
X3936
X3937
X3938
X3939
X3940
X3941
X3942
X3943
X3944
X3945
X3946
X3947
X3948
X3949
X3950
X3951
X3952
X3953
X3954
X3955
X3956
X3957
X3958
X3959
X3960
X3961
X3962
X3963
X3964
X3965
X3966
X3967
X3968
X3969
X3970
X3971
X3972
X3973
X3974
X3975
X3976
X3977
X3978
X3979
X3980
X3981
X3982
X3983
X3984
X3985
X3986
X3987
X3988
X3989
X3990
X3991
X3992
X3993
X3994
X3995
X3996
X3997
X3998
X3999
X4000
X4001
X4002
X4003
X4004
X4005
X4006
X4007
X4008
X4009
X4010
X4011
X4012
X4013
X4014
X4015
X4016
X4017
X4018
X4019
X4020
X4021
X4022
X4023
X4024
X4025
X4026
X4027
X4028
X4029
X4030
X4031
X4032
X4033
X4034
X4035
X4036
X4037
X4038
X4039
X4040
X4041
X4042
X4043
X4044
X4045
X4046
X4047
X4048
X4049
X4050
X4051
X4052
X4053
X4054
X4055
X4056
X4057
X4058
X4059
X4060
X4061
X4062
X4063
X4064
X4065
X4066
X4067
X4068
X4069
X4070
X4071
X4072
X4073
X4074
X4075
X4076
X4077
X4078
X4079
X4080
X4081
X4082
X4083
X4084
X4085
X4086
X4087
X4088
X4089
X4090
X4091
X4092
X4093
X4094
X4095
X4096
X4097
X4098
X4099
X4100
X4101
X4102
X4103
X4104
X4105
X4106
X4107
X4108
X4109
X4110
X4111
X4112
X4113
X4114
X4115
X4116
X4117
X4118
X4119
X4120
X4121
X4122
X4123
X4124
X4125
X4126
X4127
X4128
X4129
X4130
X4131
X4132
X4133
X4134
X4135
X4136
X4137
X4138
X4139
X4140
X4141
X4142
X4143
X4144
X4145
X4146
X4147
X4148
X4149
X4150
X4151
X4152
X4153
X4154
X4155
X4156
X4157
X4158
X4159
X4160
X4161
X4162
X4163
X4164
X4165
X4166
X4167
X4168
X4169
X4170
X4171
X4172
X4173
X4174
X4175
X4176
X4177
X4178
X4179
X4180
X4181
X4182
X4183
X4184
X4185
X4186
X4187
X4188
X4189
X4190
X4191
X4192
X4193
X4194
X4195
X4196
X4197
X4198
X4199
X4200
X4201
X4202
X4203
X4204
X4205
X4206
X4207
X4208
X4209
X4210
X4211
X4212
X4213
X4214
X4215
X

# Diagnostics on Wire Harness Board

- 10 boards with the Pro-Turn 600 harness and electrical components.
- Groups of 3 technicians.
- 4 different electrical issues.

Symptoms

1) Engine will not crank. No power to the starter motor. (3 boards)
2) Engine will crank but not start. (3 boards)
3) Engine will die when the operator disengages the brake or when the PTO switch is engaged with the brake on. (2 boards)
4) Accessories will not work. (2 boards)

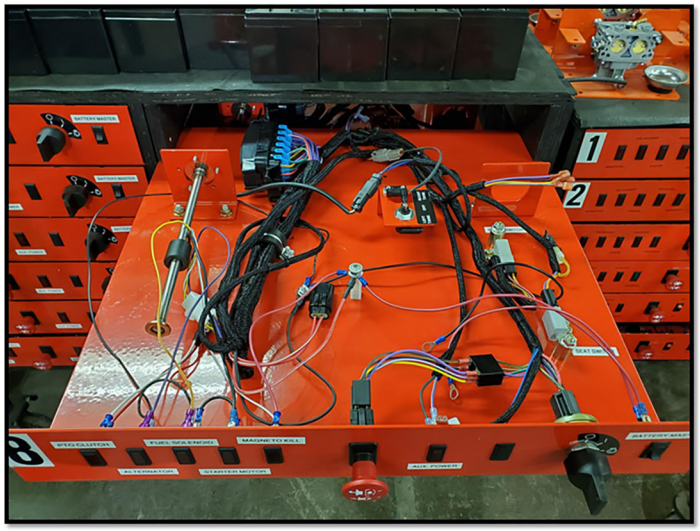

**Goal**: Diagnose all different symptoms with your group to determine the electrical issue. Write down the issue. Determine the solution/repair.

# Diagnosing Electrical Issues on PT-600

- 3 Gravely Pro-Turn 600s
- 3 group rotation
- 3 different electrical issues

Symptoms

- 1) Fuel gauge will always read full or inaccurate.
- 2) Engine will crank but not start.
- 3) GDI Meter only reads one tank.




**Goal**: Review additional electrical failures on the Pro-Turn 600 units and discuss diagnostics and repairs.

# Key Take-Aways

- Focus on the symptom to direct the diagnostics.
- Use your schematic and multimeter to rule out circuits and isolate the failures.
- Test easy to access components first (fuse block, safety interlock components).
- Look for electrical diagnostic information in the Pro-Turn 600 Interactive Service Manual this spring.

# Parking Brake System

## Pro-Turn 600



# Learning Objectives

After completing this course, you will…

- Know how the parking brake system on a Pro-Turn 600 functions
- Understand how to adjust parking brake interlock (mechanical neutral) and parking brake force
- Understand key troubleshooting and diagnostic points of the parking brake system

# Parking Brake Overview

- Disc brake system
- Spring controlled tension
- Cam style caliper design
- Rotor/hub are integrated
- Mechanical neutral engagement to steering controls
- Serviceable parts



# Component Overview

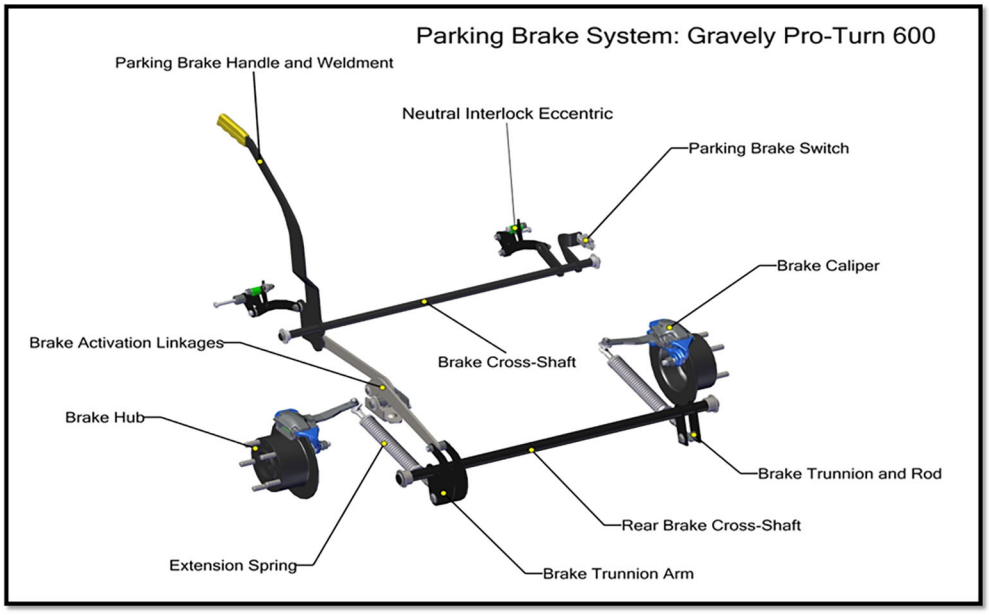


# Parking Brake Operation – Engaged

- Handle in upright position
- Brake cross-shaft rotated to engage neutral interlock arm
- Activation linkages pulled forward
  - This has cam feature to keep parking brake engaged
- Rear cross-shaft is rotated
- Extension spring assembly extended
- Caliber arm pulled rearward
  - Rotates cam in caliper to engage brake pads with rotor

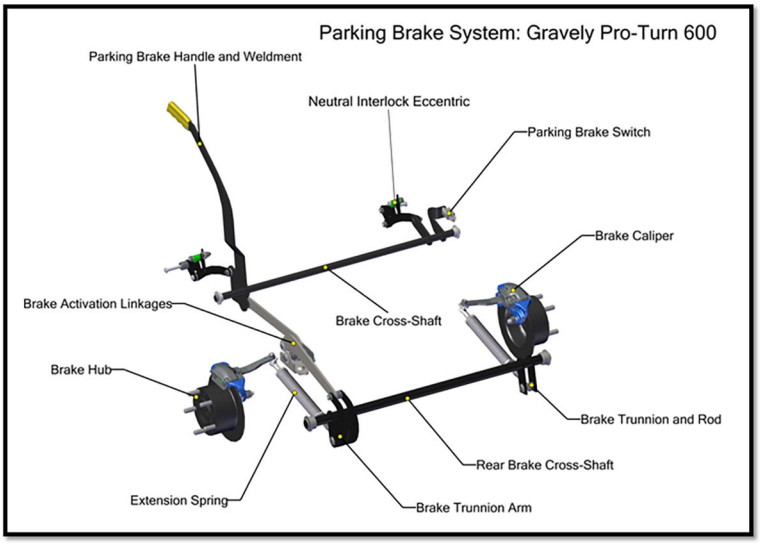

# Parking Brake Operation – Disengaged

- Handle in low position
- Brake cross-shaft rotated to disengage neutral interlock arms
- Activation linkages moved rearward
  - This has cam to limit travel
- Rear cross-shaft to remove pressure from extension spring assembly
- Extension spring assembly in pre-loaded state
- Caliber arm in neutral state
  - Allows for no pressure on brake pads to ensure no pad wear
  - Extension spring assembly length sets neutral position

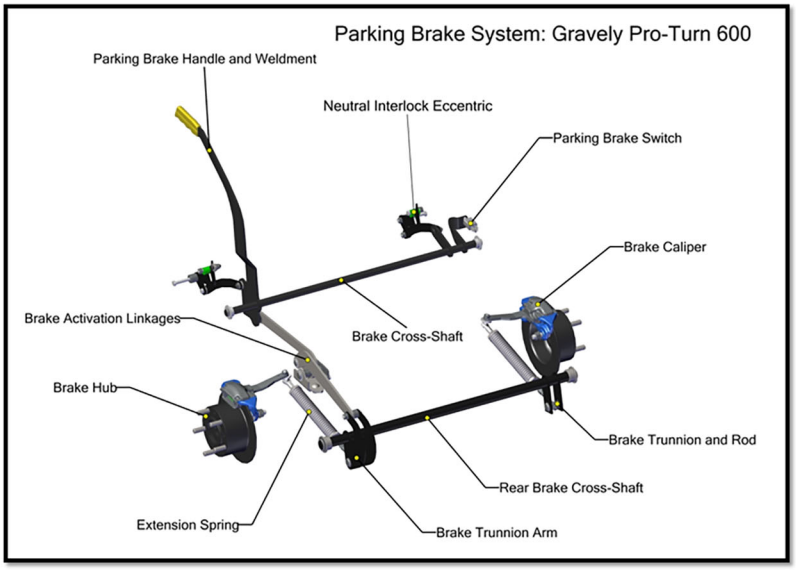


# Extension Spring Assembly Overview

- Controls neutral state of caliper arm
- Has factory set preload for normal spring state
- Ensures continuous force to keep caliper arm engaged
- Ability to adjust brake holding force



# Parking Brake Adjustments

- Parking brake interlock (mechanical neutral) is set by eccentrics mounted to steering controls.
- Adjustment Steps:
  1. Ensure transaxle neutral is adjusted properly
  2. Release parking brake and loosen eccentric(s)
  3. Engage parking brake
  4. Rotate eccentric(s) until it aligns with interlock
  5. Holding eccentrics, tighten hardware
  6. Operate the parking brake to unsure proper setting for mechanical neutral

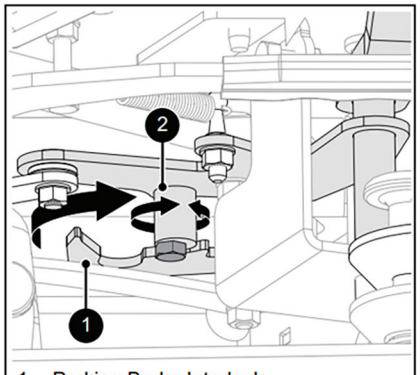


1. Parking Brake Interlock
2. Eccentric Spacer

Figure 44

# Parking Brake Adjustments

- Disengaged Adjustment
  - Should never need adjustment per life of the machine
  - Uses 2 jam nuts to set
    - Move jam nuts towards trunnion – pushes caliper arm forward
    - Move jam nuts away from trunnion – pulls caliper arm back
  - Uses a small spacer to avoid wear against trunnion



# Parking Brake Adjustments

Engagement Adjustment

- Uses single lock nut to set
  - Increase holding tension – tighten lock nut
  - Decrease holding tension – loosen lock nut
- Tension measured but extended spring length when parking brake engaged
- Adjustment procedure in owner's manual

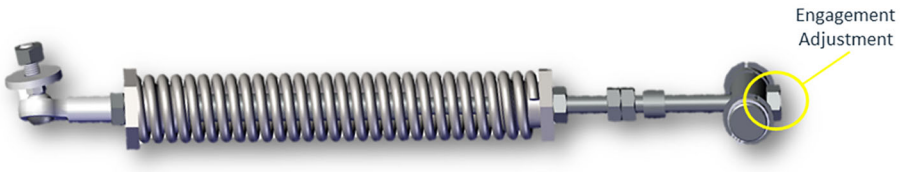


# Parking Brake Adjustments

Adjustment Steps:

1. Engage parking brake
2. Tighten lock nut until spring length measures 8.25" +/- 0.06"
   **- Tech tip:** Hold spring from rotating with wrench on spring plug
3. Engage and disengage parking brake several time.
4. Verify spring length again to ensure it is within specified adjustment length

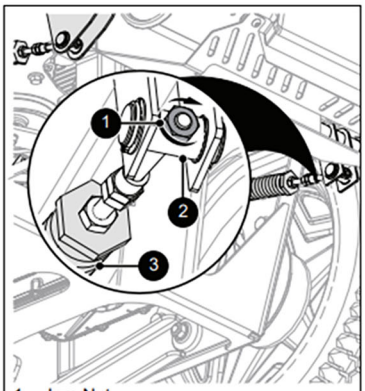


1. Jam Nut
2. Trunnion
3. Compression Spring

Figure 49

# Key Take-Aways

- Understand parking brake components
- Understand how to set the parking brake interlock (mechanical neutral)
- Know that the extension spring is adjusted to a specified length
- Understand how the parking brake operates

# Suspension Pod Removal / Install

## Pro-Turn 600



# Learning Objectives

After completing this course you will...

- Know how to remove and install the suspension pod on a Pro-Turn 600.
- Understand the tools required for the procedure.
- Identify safe and proper lifting practices for removal and installation.

# Required Tools

- Overhead hoist or other safe lifting mechanism.
- Socket wrench and sockets
- Bungie cords or rope



# Suspension Pod – General Information

- Weighs approximately 210lbs.
- Front and rear coil-over shocks.
- Removes with only 6 bolts.
- Adjustable foot platform.
- Foot platform lifts for access to deck system.
- Serviceable parts.



# Removal Procedure

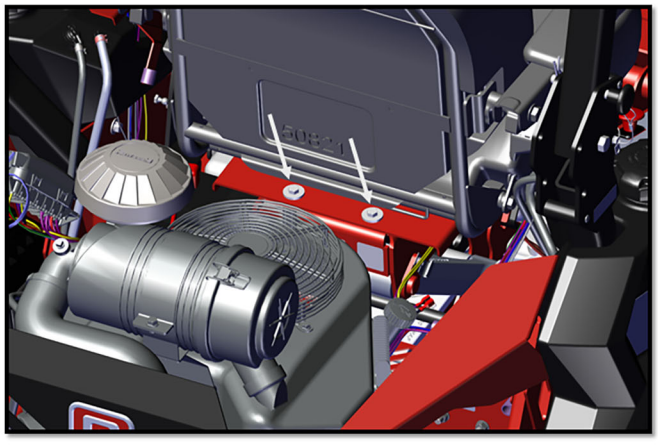

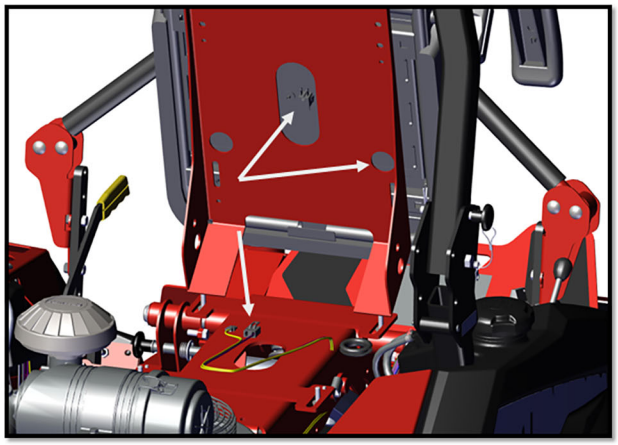

- Remove the two rear seat bolts with a ½" socket wrench to allow the seat to flip forward into the service position.
- Then disconnect the seat switch and guide the harness through the opening with the grommet and J-Clip.
- At this point it is recommended to remove the battery for clearance to avoid damage during pod removal.

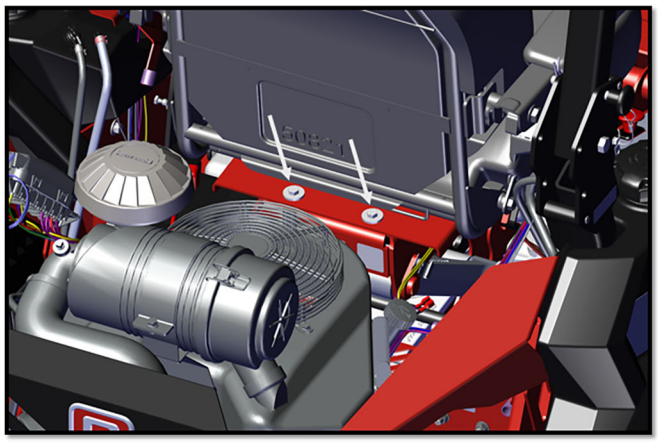

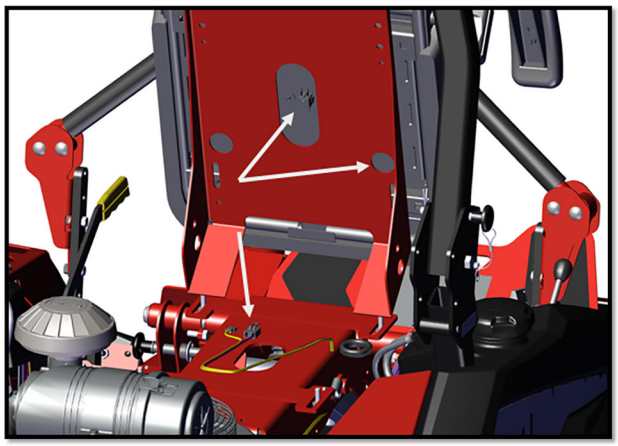

- Remove the two rear seat bolts with a ½" socket wrench to allow the seat to flip forward into the service position.
- Then disconnect the seat switch and guide the harness through the opening with the grommet and J-Clip.
- At this point it is recommended to remove the battery for clearance to avoid damage during pod removal.

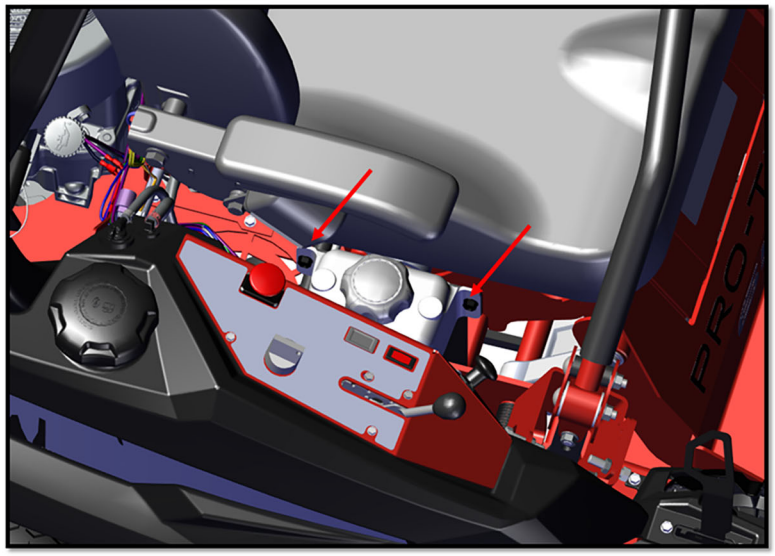

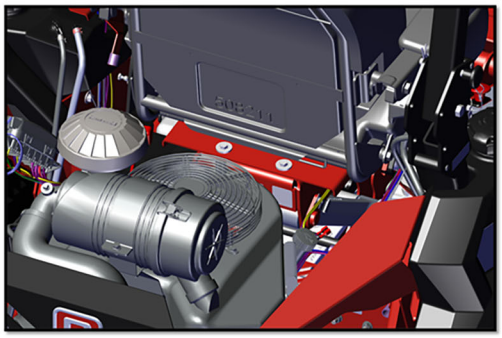

- Place seat back into operator position and reinstall the rear seat bolts.

- On both sides of the pod there are oil expansion tanks. Remove the two ½" mounting bolts for the left and right tanks and then it is recommended to bungie the expansion tanks to the ROPS so oil will not spill.

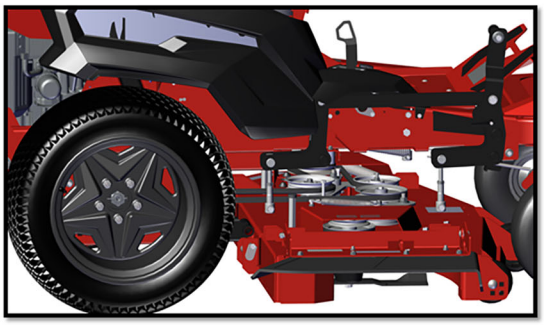

1. Lower the deck to the lowest position for access to underneath the Zero-Turn.

2. There are six 9/16” hex bolts and washers that secure the pod to the frame, three on each side. These hex bolts need to be removed from the bottom side of the machine. Retain all hardware for reinstallation.

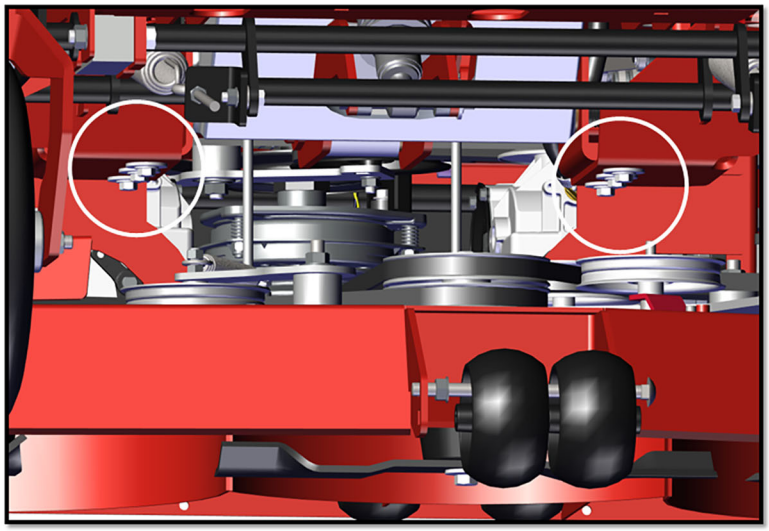



Lift the spring-loaded foot plate up into the locking position. The foot plate will self-lock.

For this next step you will need two operators and a hoist. With the hoist hooks you will want to find a center of gravity point to balance the pod as it is lifted from the machine.

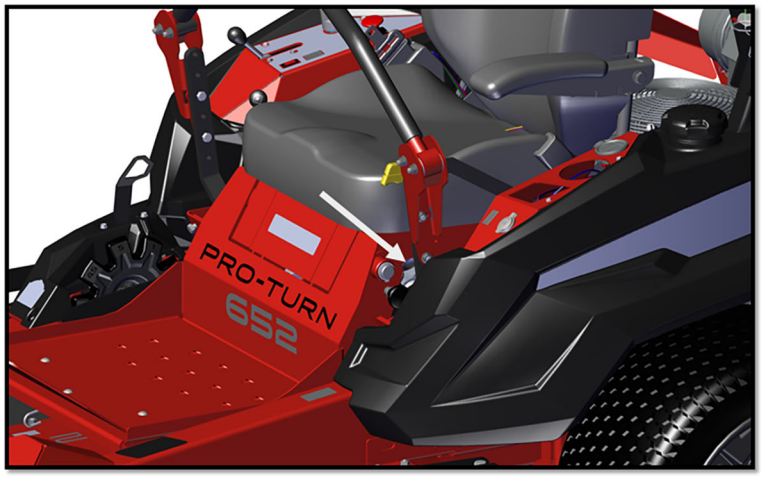

- One operator should help guide the removal of the suspension pod while the other operates the hoist controls.
- Lift and safely guide the pod up from the unit and bring forward to the front of the unit passed the fenders. Then set the pod aside.

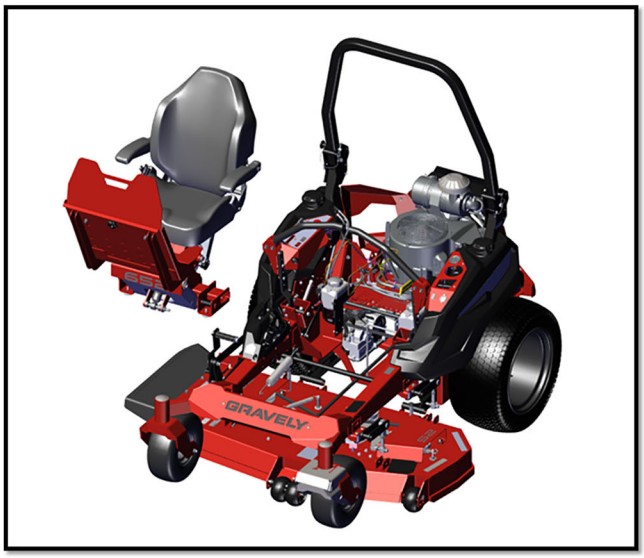


# Suspension Pod Install

- Prior to install, ensure that the expansion tanks are securely moved out of the way for clearance of the pod.



- Two operators should be used again for this step.
- Using the same lift points, safely lift and guide the suspension pod in front of the unit, over the deck.
- Rotate the pod so it is facing forward and carefully guide the pod downwards over the pod base while aligning the 6 mounting holes.
- Keep the pod stable with the hoist during this process and make sure the expansion tanks are properly routed to their mounting brackets.

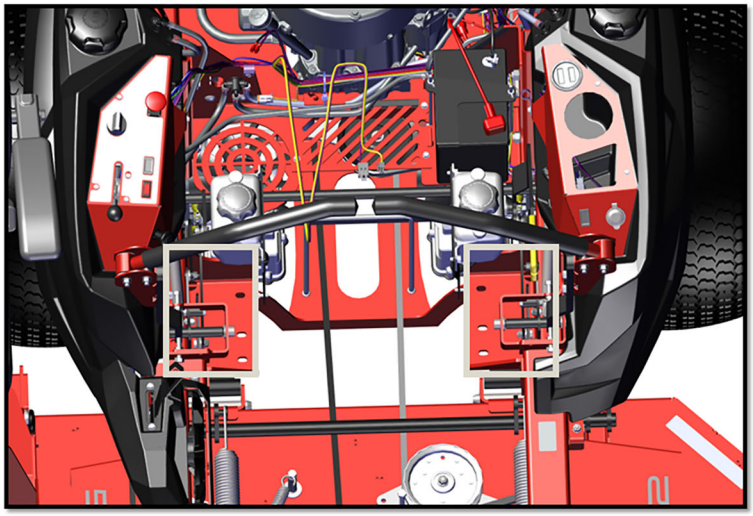

*View of Pod Base*

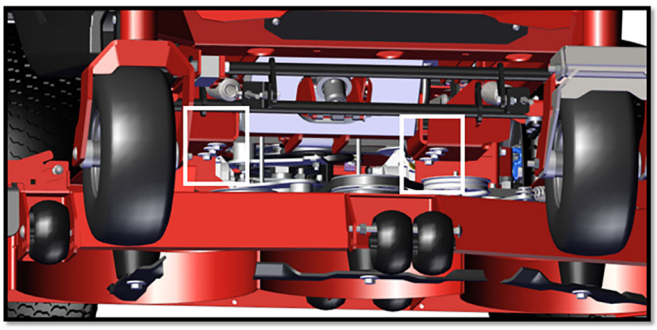

- Install the six 9/16" hex bolts and washers that secure the pod to the pod base on the frame.

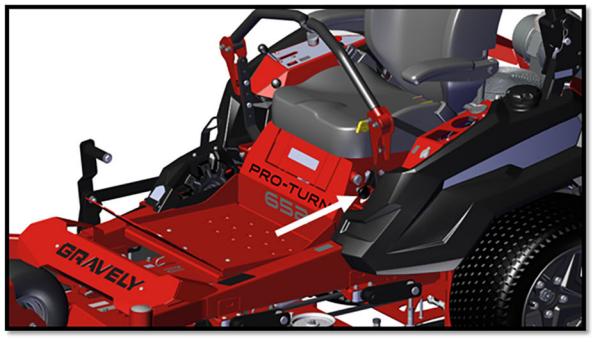


Lower the spring-loaded foot plate to operating position by releasing the locking pin.

Mount both expansion tanks on the left and right side of the suspension pod to each bracket with a ½" socket.

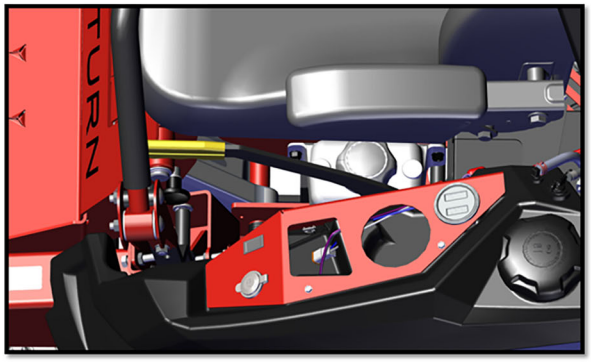


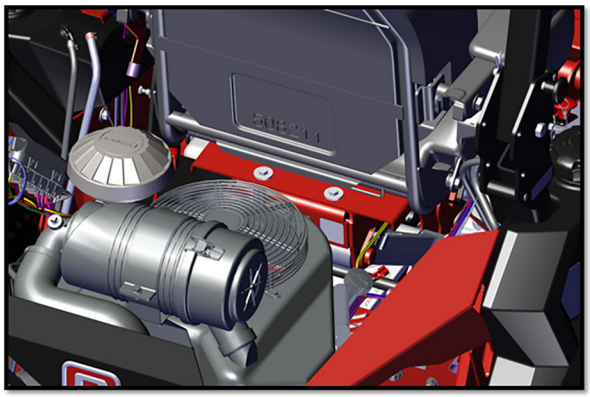

Remove the two ½" rear seat bolts to allow the seat to flip forward in the service position.

- Route the wire harness in the J-Clips and through the grommet so that it connects to the seat switch. Ensure that the seat can properly close without pinching the wire harness.
- Place the operator seat back into operating position and install the two rear seat bolts.
- Reinstall the battery (if it was removed).

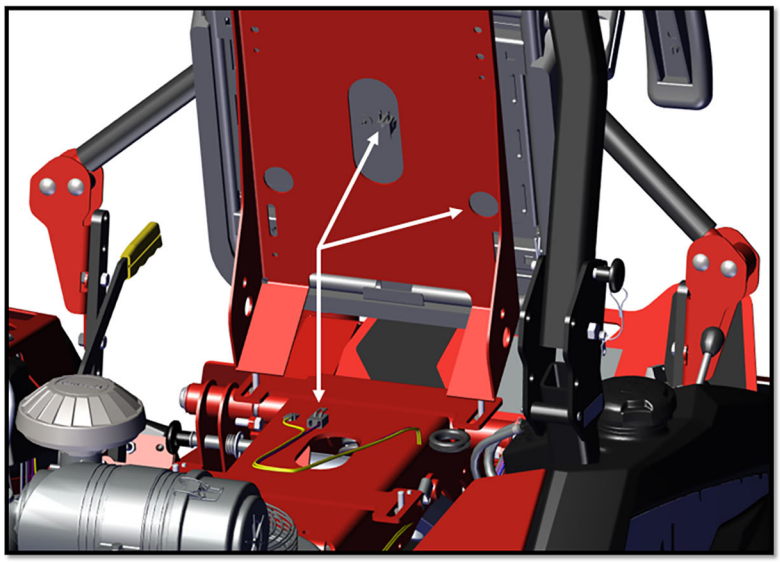

# Key Take-Aways

- Use a second technician to help remove and install the suspension pod.
- Use safe and proper lifting practices with an overhead hoist or comparable lifting mechanism.
- Take caution with the oil expansion tanks so they do not get damaged during install and removal.
- It is recommended to remove the battery to avoid damage during this procedure.

# Suspension Pod Disassembly

## Pro-Turn 600



# Learning Objectives

After completing this lesson you will...

- Know how disassemble and assemble the suspension pod on the Gravely Pro-Turn 600.
- Understand the primary serviceable parts on the suspension pod assembly.
- Identify Tech Tips to help with the procedure.

# Suspension Pod Disassembly

- Goal is to disassemble pod to access serviceable components (for example: upper and lower shocks).
- Begin with the pod fully removed from the unit and on a level surface.
- Operator seat is still in place.



- Remove the two hex bolts and washers that mount the operator seat to the pod with a ½" wrench.






- Pivot the operator seat up at approximately 90 degrees and remove the four hex bolts and four washers that secure the seat to the seat plate. Set the seat aside and retain hardware.

- Remove both snap rings and washers on each end of the front pivot-shaft.






- Then use a long metal rod and hammer to drive the pivot-shaft free from the assembly on one side.
- It is recommended to lift on the footrest assembly to relieve pressure on the shaft.

- Set the footrest assembly and pivot shaft aside unless service is required.



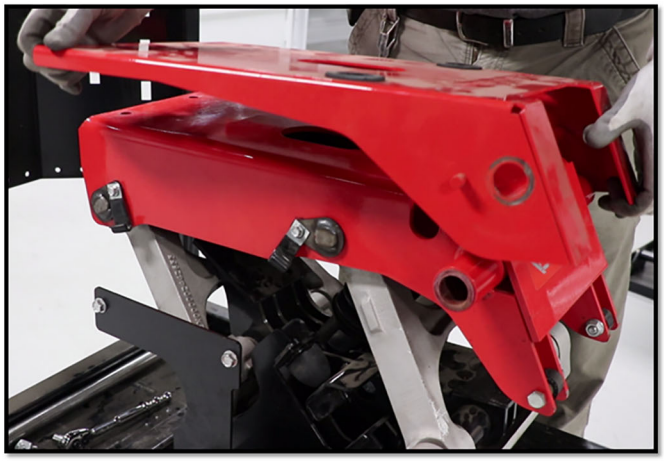

- Set the seat plate aside.

- Unless service is required, the footrest locking pin assembly, which includes a push/pull knob, pin, compression spring, and two washers, and cotter pin, can remain in place.

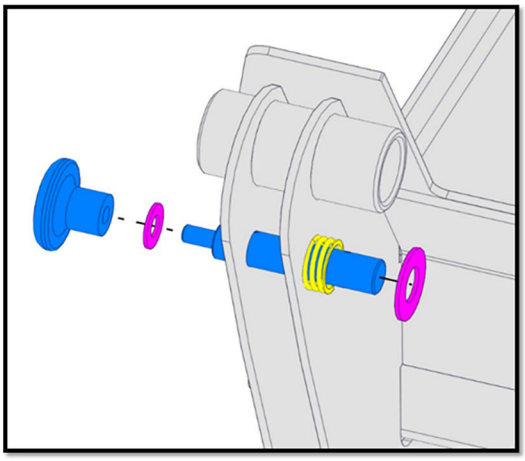



- Then remove the upper shock mount hardware which includes the hex bolt, washers, and center locking flange nut. Retain hardware.

- Remove both seat support pivot shafts by removing both socket head retaining screws and sliding the shafts out the same side of the J-clip.
- The J-clips will also be removed during this step.






- Next, remove the seat plate assembly and set it aside.

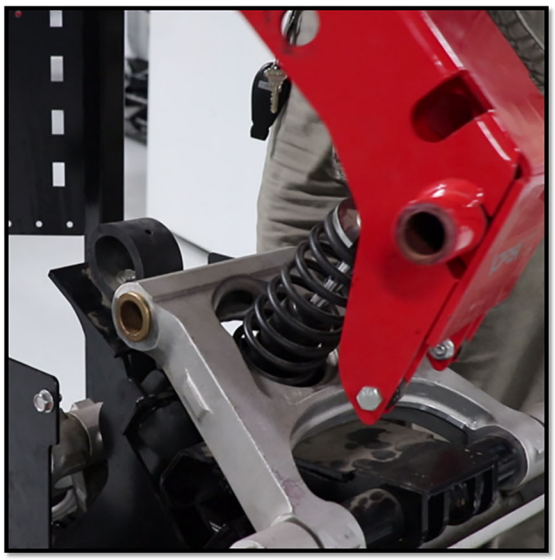

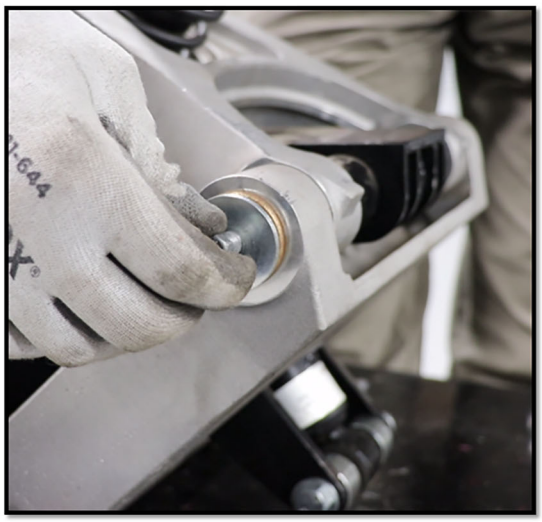

- Remove both cap screws and washers from the front pivot shaft as shown here.

- Then remove the roll pin with a punch and a hammer from the center of the pivot shaft.

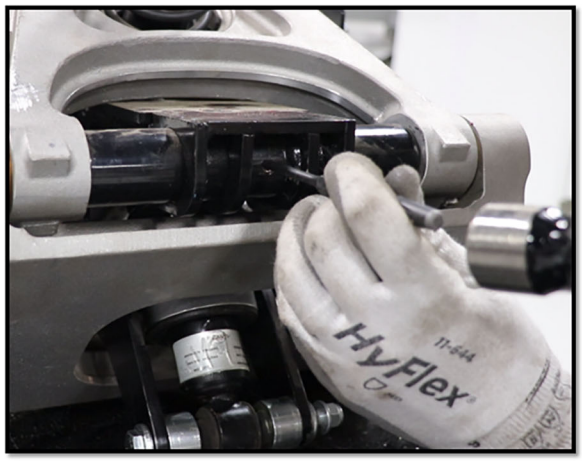


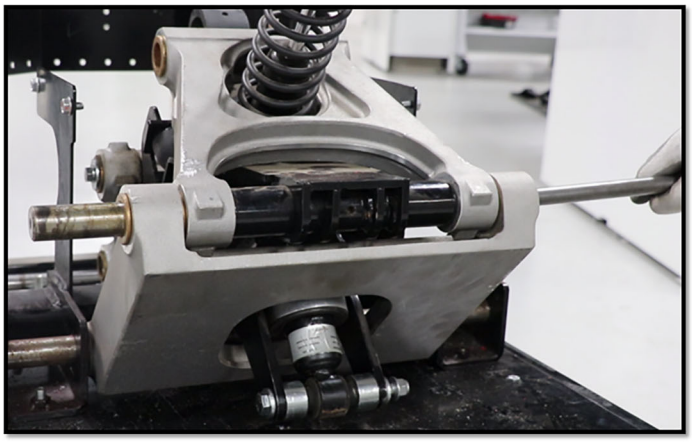

- The pivot shaft can now be removed from either side by using the long metal rod and hammer.

- The upper link of the suspension pod can now be removed from around the upper shock.

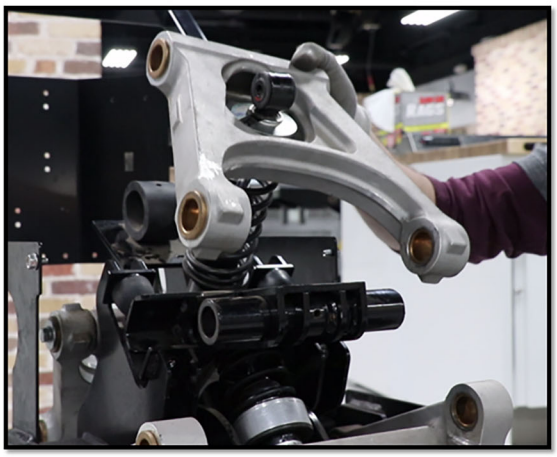

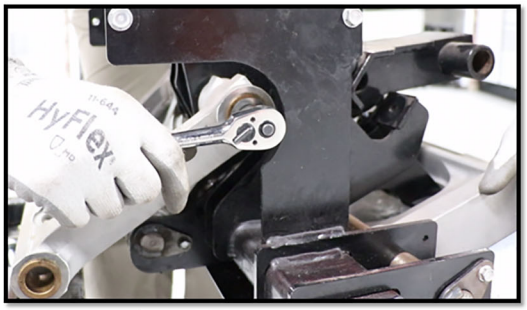




- Next you will need to remove the rear mid-level link from the pod. Remove a cap screw and washer from one end and use the long metal rod and hammer to drive the pivot shaft through the assembly.

- Then remove the mid-level link from the pod as shown here.

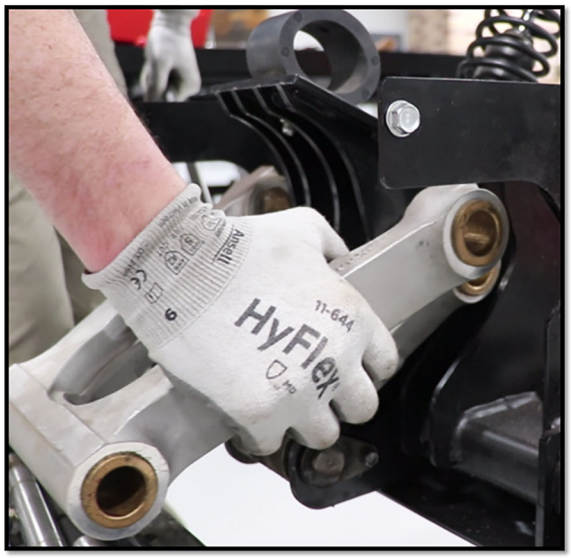


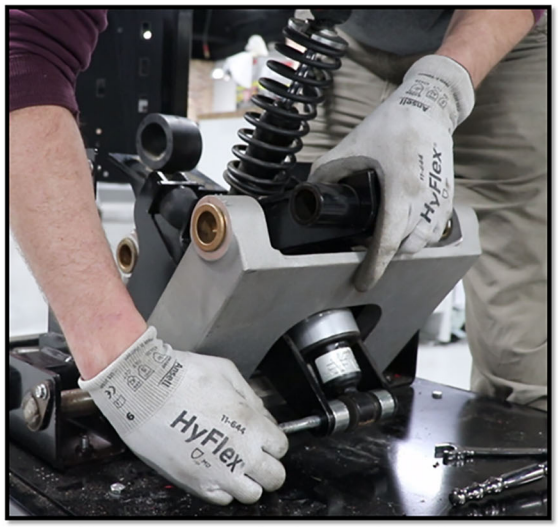


- Then you will want to free the lower shock lower mount by removing the hex bolt, two spacers, washer, and center locking flange nut.
- As a tech tip, pull upwards on the front side of the black center weldment as shown here to release the pressure on the spring.

- Remove the four bump stop retaining nuts securing the four bump stops from the pod.




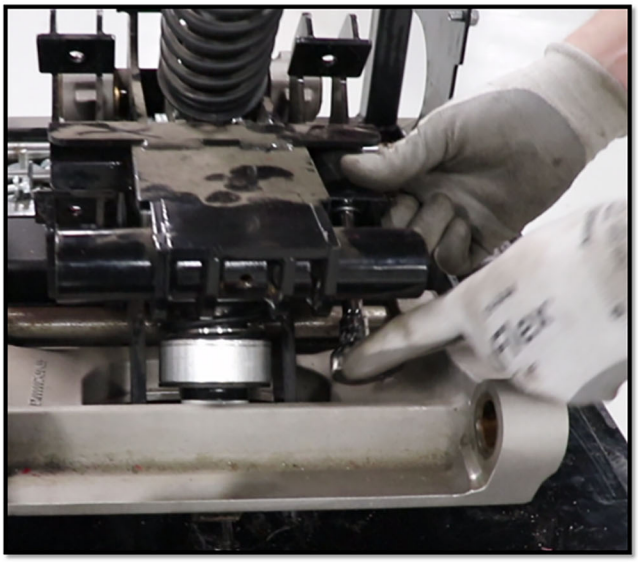

- Next, remove the hex bolt and nut retaining the upper mount for the lower shock.

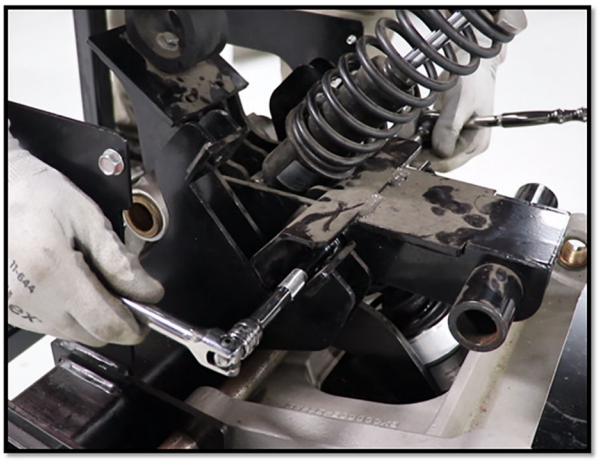




- Inspect and service the lower shock as needed upon removal.

- The center black weldment and upper shock can be removed from the base assembly.

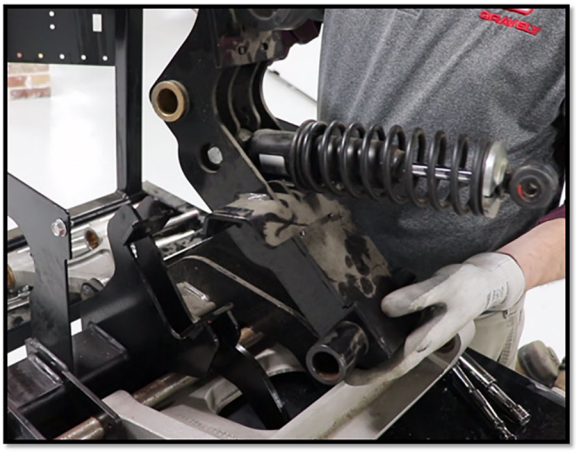

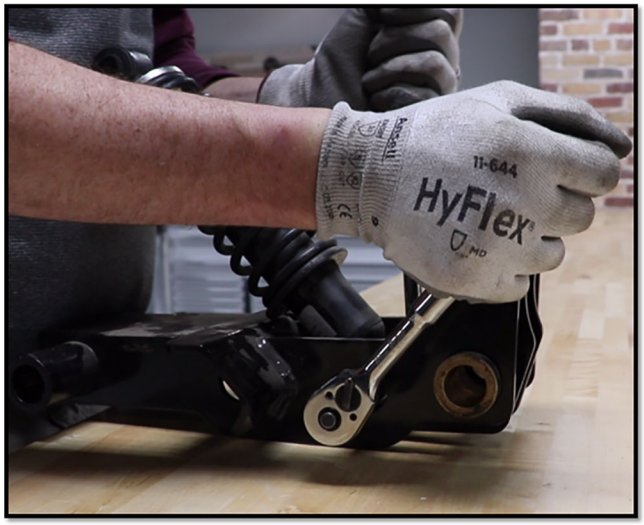


- Remove the lower mounting hardware for the upper shock. Remove the hex bolt, washers, and center locking flange nut.

- Then remove the upper shock and inspect and service as needed.
- Inspect all components and replace as needed.

✓ Bushings
✓ Bumpers
✓ Shocks
✓ Springs
✓ Weldments
✓ cross-shafts
✓ Hardware




# Suspension Pod Reassembly

- Position the upper shock in the correct orientation between the shock plates on the black center weldment and insert the lower mounting hardware into to the weldment. This includes the hex bolt, washers, and center locking flange nut.




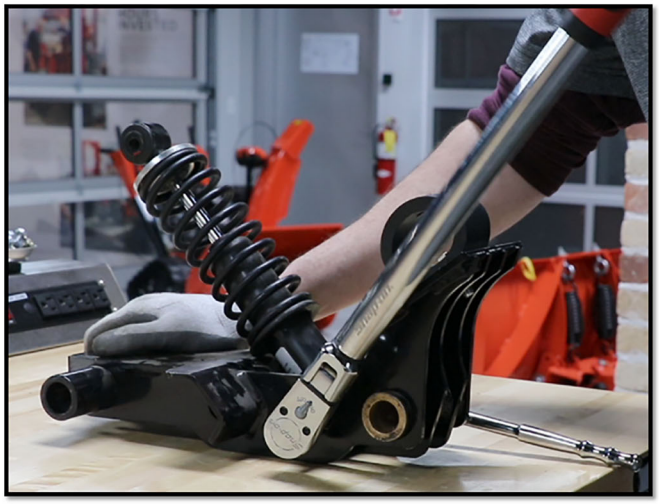

- Torque to 35-45 ft.-lbs.

- Prior to installing the upper shock and weldment assembly, re-install the top two bump stops onto the pod frame.
- Torque each bolt for the bump stops to 40-50 in.-lbs.



- Then position the upper shock and black weldment assembly onto the pod frame as shown here.

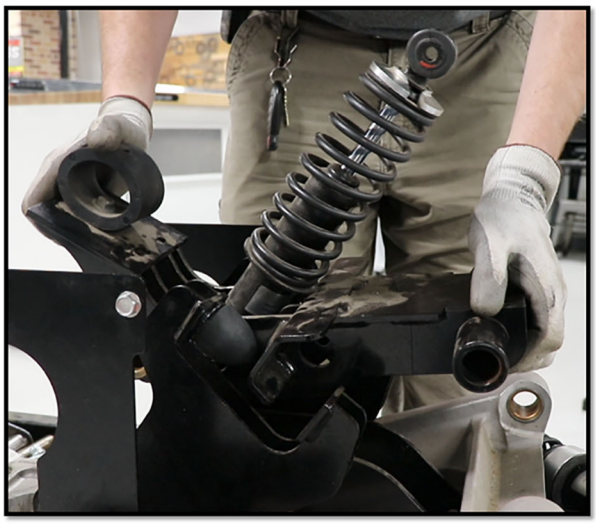



- Position the lower shock in the correct orientation and insert the upper mounting hardware, which includes the hex bolt and nut.
- Torque the hardware to 35-45 ft.-lbs.

- Install the bottom two bump stops and torque the bolt for each to 40-50 in.-lbs.

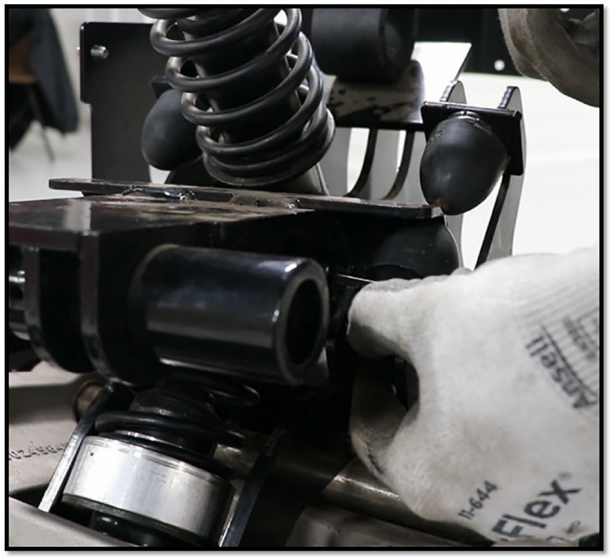





- Pivot the rear lower linkage toward the center of the pod.

- Insert the rear mid-level link and then insert rear pivot shaft as shown here.

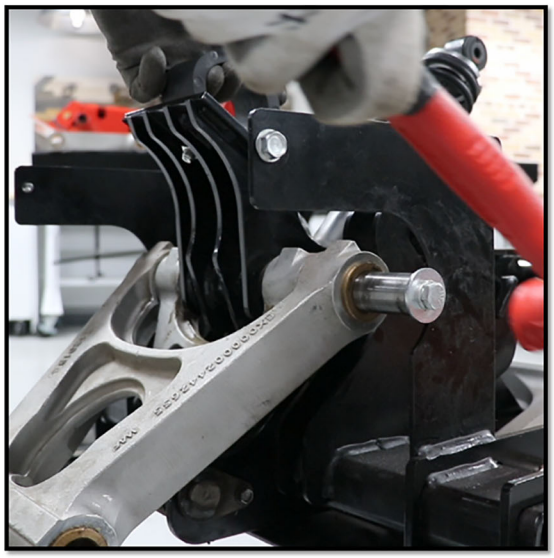

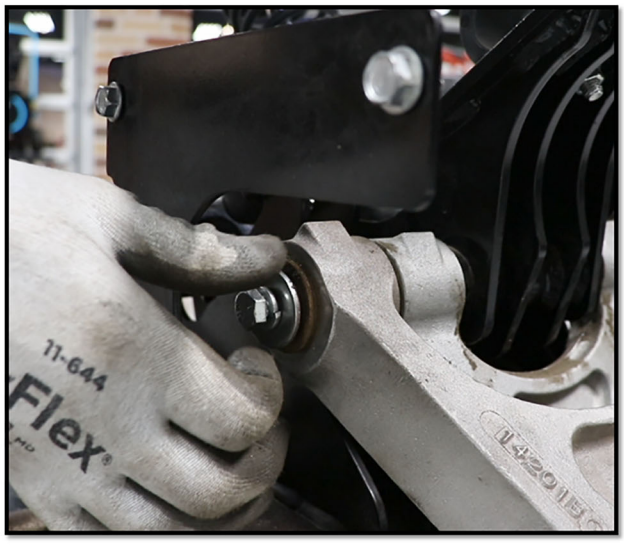


- Once installed, install the washer and cap screw and torque the hardware to 23-27 ft.-lbs.

- Install the hardware securing the lower mount of the lower shock.
- Guide the hex bolt through the two spacers, shock opening, washer, and secure with a center locking flange nut.
- Tech Tip: pull the center black weldment away from the shock mount to align for hardware.
- Torque the hardware to **69-79** ft.-lbs.

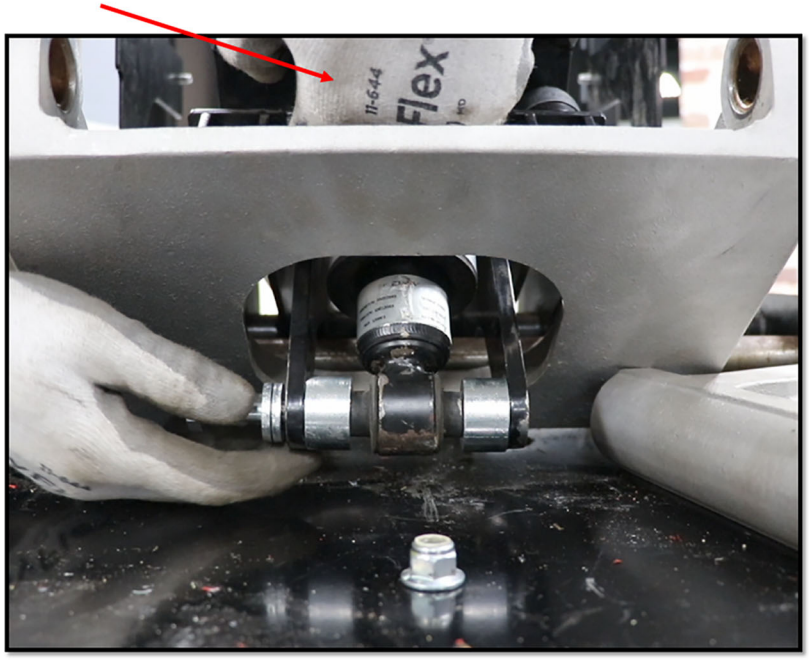

- Position the upper link of the suspension pod in the proper orientation around the upper shock.
- Pivot the lower front link towards the center of the pod and align both links with the cross-shaft of the black weldment.

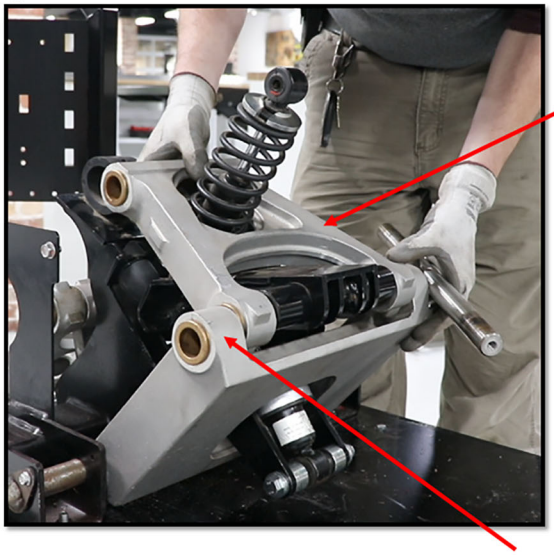

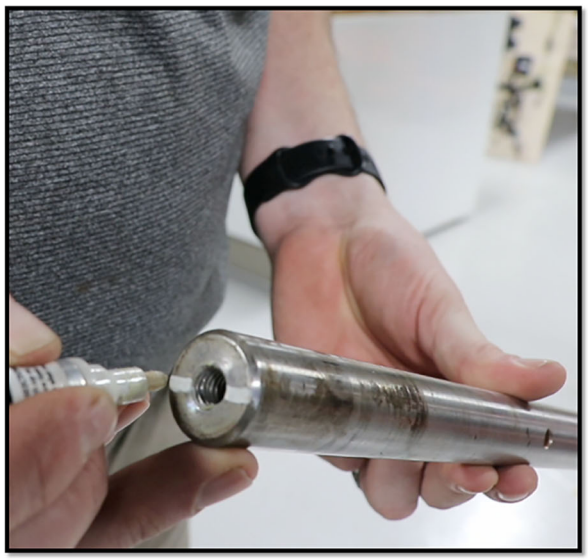

- Tech Tip: prior to installing the front pivot shaft, mark the end with a paint pin to help align the roll pin in the next step. Insert the front pivot shaft through the openings to retain the linkages as shown here.

- Insert the front pivot shaft through the openings to retain the linkages as shown here.

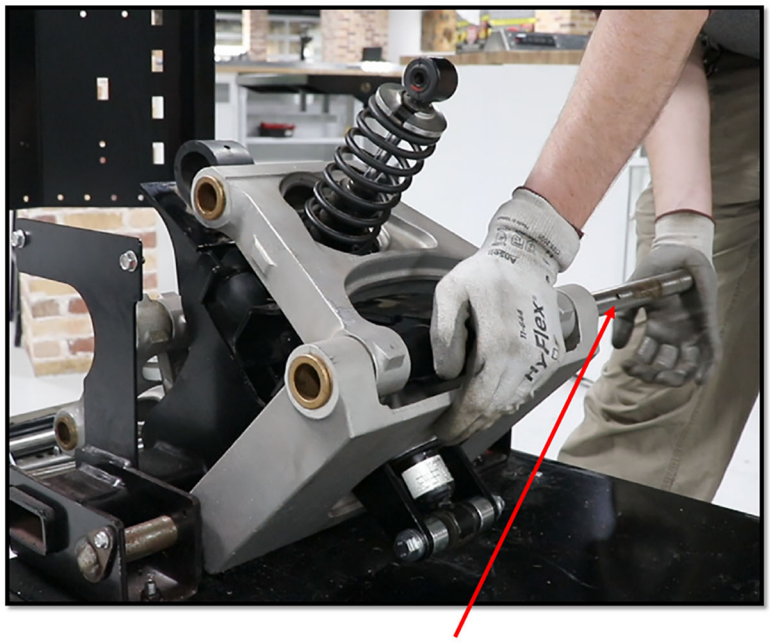

- Install the roll pin in place with a punch and hammer in the center of the front pivot shaft.

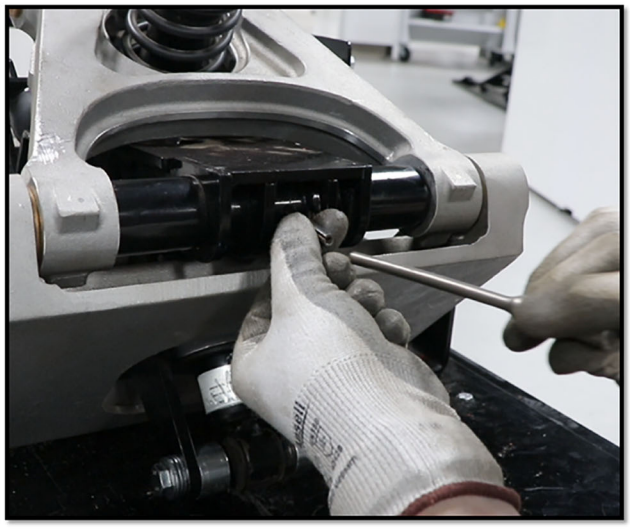

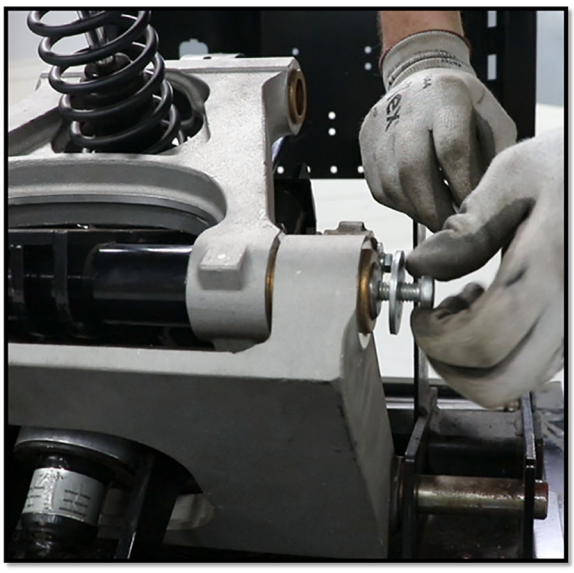

- Then install both washers and cap screws on each end of the front pivot shaft.
- Torque the hardware to 23-27 ft.-lbs.

- Guide the seat plate assembly back on top of the suspension pod until the upper shock mount aligns with the assembly.

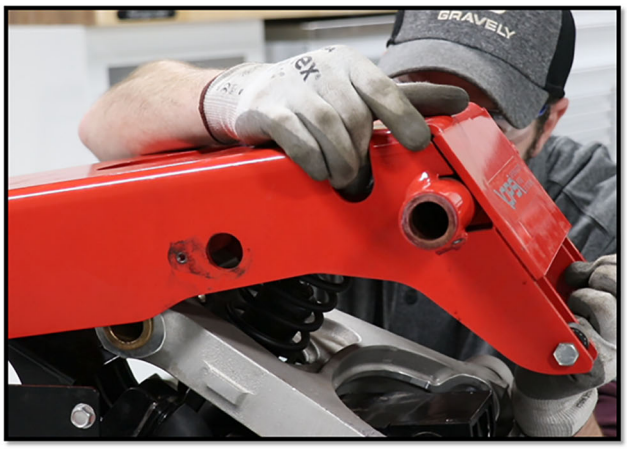




- Install the upper shock mounting hardware, which includes the hex bolt, washers, and center locking flange nut.
- Torque the hardware to 35 – 45 ft.-lbs.

- Insert both seat support pivot shafts on the side where the J-Clip goes. This is the same side as the grommet.

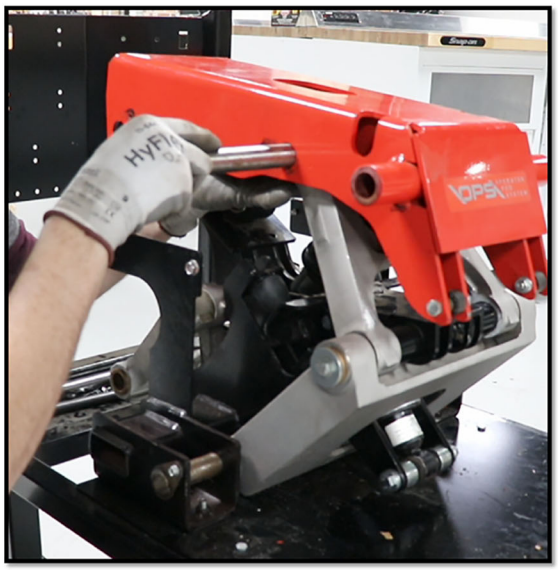

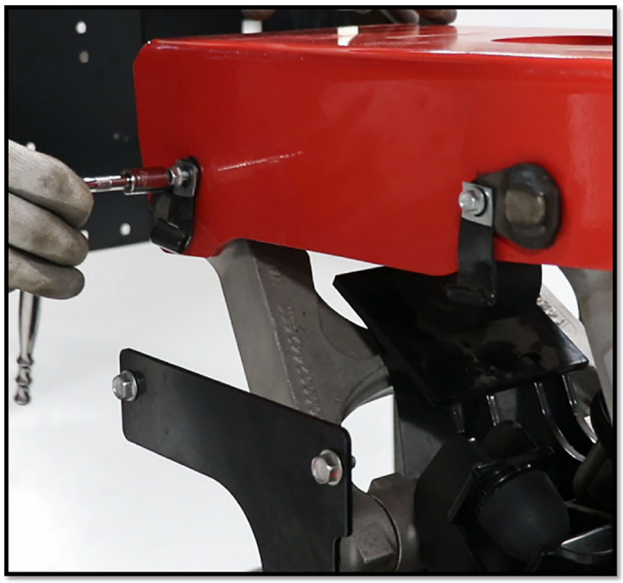

- Place the end caps on the other end of the pivot shafts.
- On the J-Clip side, install both socket head retaining screws to secure the pivot shafts in place.

- Position the seat plate back on top of the assembly.

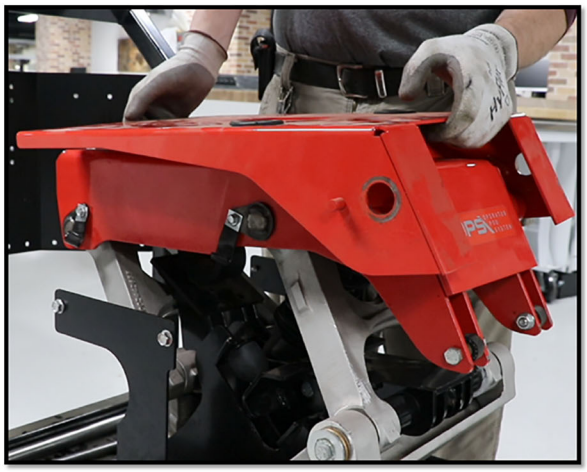

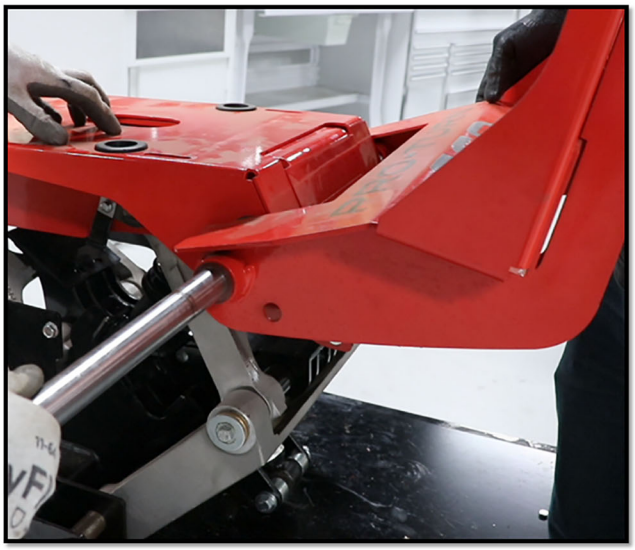

- Then, with the footrest assembly aligned in the front pivot shaft opening, install the front pivot shaft.
- Use a long metal rod and hammer if required to install the shaft and lift on the footrest assembly to relieve pressure on the shaft.

- Once the shaft is fully installed, place washers on both ends and install both snap rings to secure the shaft in place.





- Pivot the seat plate assembly up at approximately 90 degrees and align the mounting holes on the bottom of the operator seat with the slots on the seat plate assembly.
- Then install the 4 washers and four bolts to mount the seat to the seat plate.

- Lower the seat and seat plate onto the pod and install the two hex bolts and washers that mount the seat plate to the pod.
- Assembly is now complete.



# Key Take-Aways

- Inspect all serviceable components during disassembly and replace as necessary.
- Torque all hardware for lower and upper shock mounts as well as cross-shaft hardware.
- All suspension pod parts are saleable items found on Parts Radar.

# HTG Transmission Replacement

## Pro-Turn 600

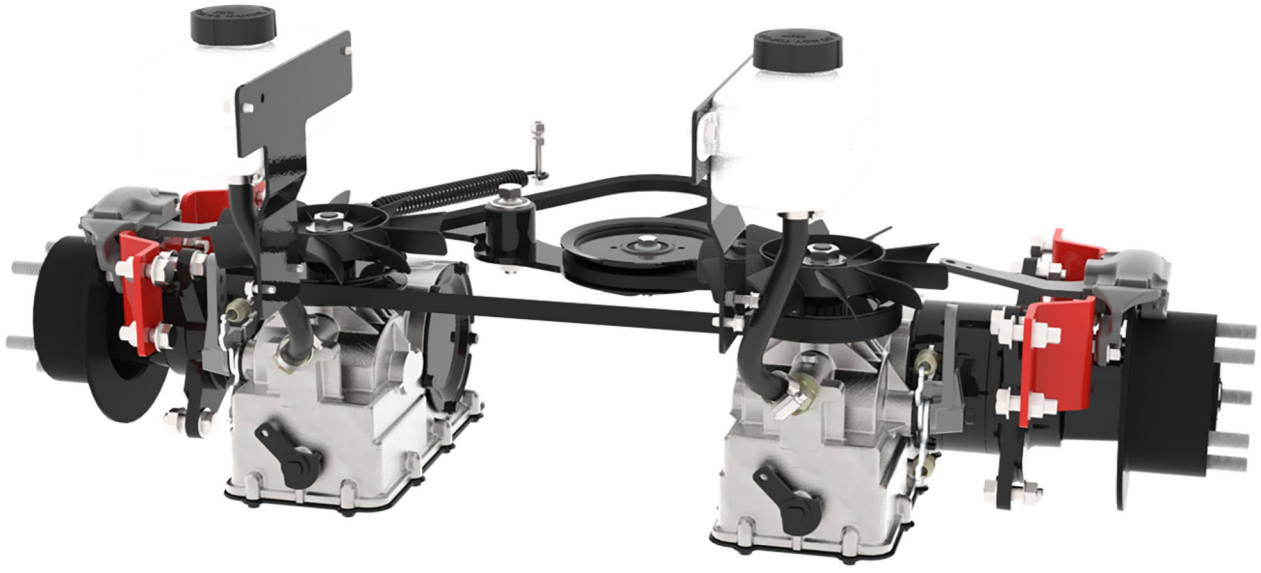

# Learning Objectives

After completing this lesson, you will...

- Understand the benefits to HTG removal through the bottom of the chassis with the fan off.
- Know how to remove and replace a parker HTG transmission on a PT600.

# Prior to Removal

- Ensure proper PPE is worn.
- Key off, engage parking brake, and let all hot parts cool.
- Chock front wheels.
- Jack up and support rear of unit making certain to use correct lifting points.
- Remove rear tire and wheel spacer from transaxle that is getting service.



- Remove the two seat plate bolts behind the seat.

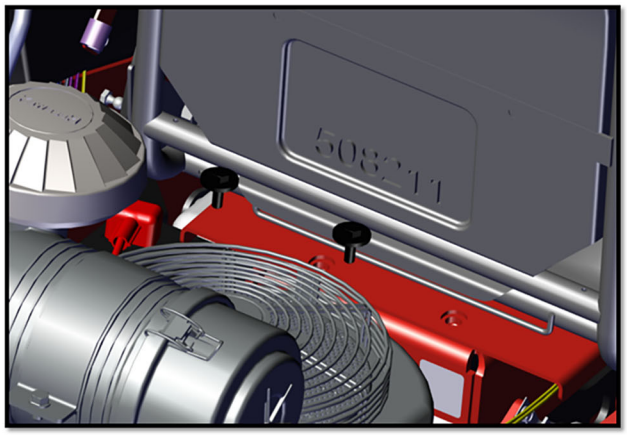

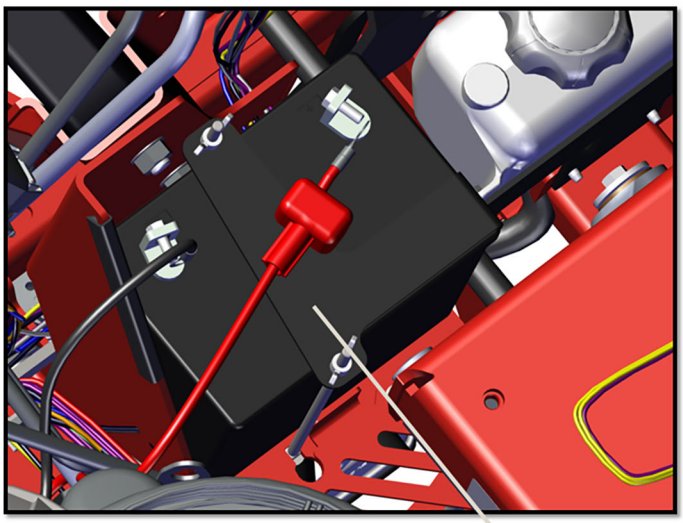


- Pivot seat plate forward
- Disconnect Battery
- If completing R&R on LH transaxle remove battery and hold down bracket

- Release tension from the deck belt and remove belt from PTO clutch.

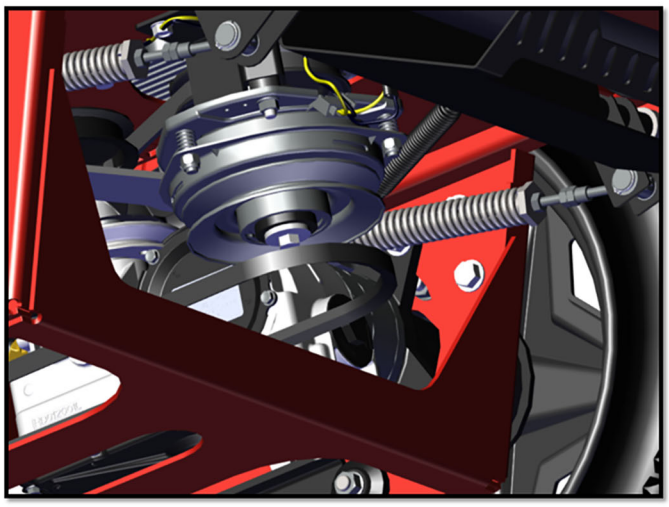

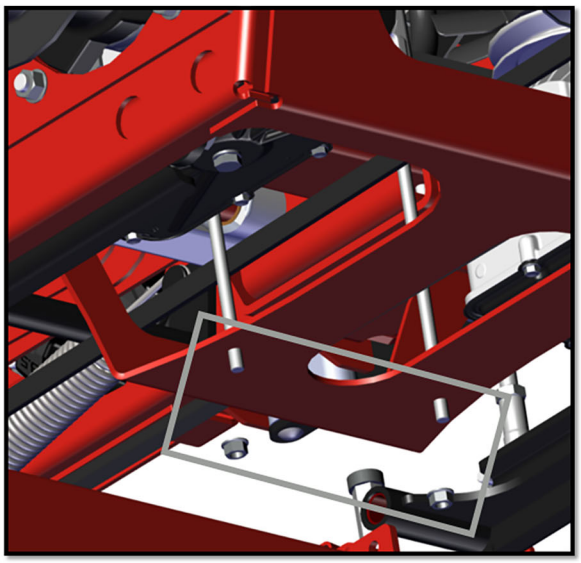

- Remove deck belt finger from frame.

- Release tension from the transmission drive belt by removing the tensioner spring from the anchor bolt.

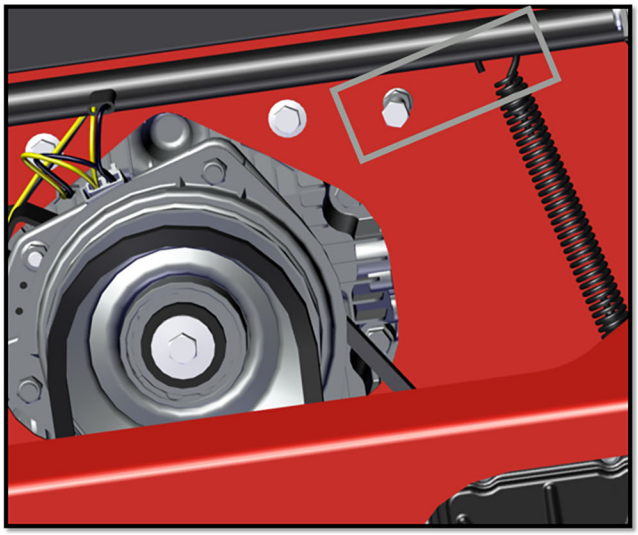

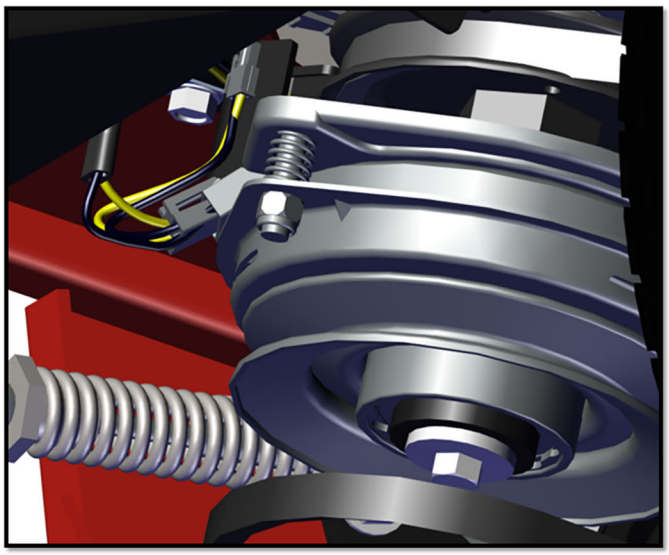

- Disconnect the PTO Clutch Connector from the wire harness.

- Remove the clutch bolt and clutch from the crankshaft.
- Retain for reassembly.
  - Clutch bolt
  - Clutch spacer
  - Keyway
  - And washers

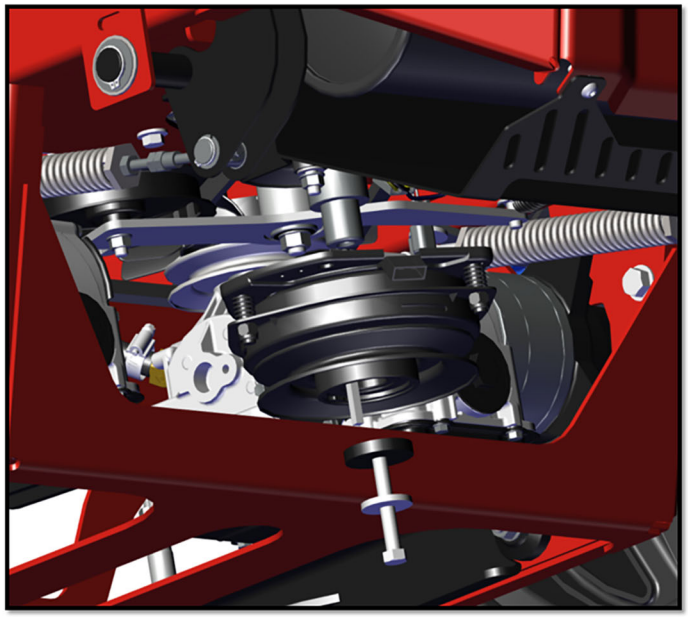

- Disengage parking brake and remove rear adjustment nut using a ½" wrench.

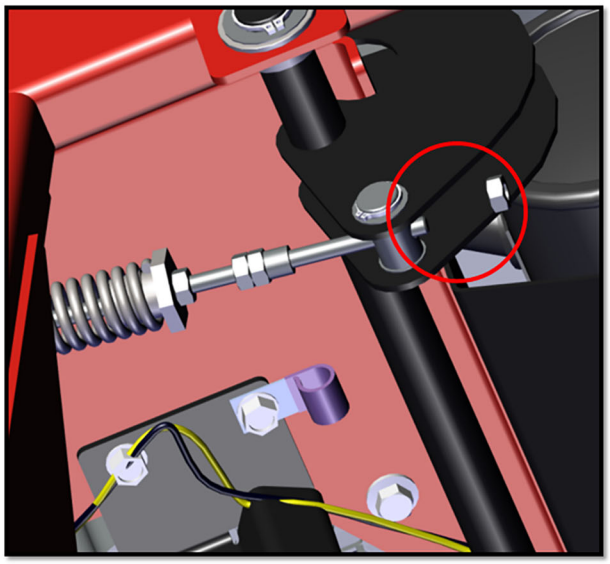

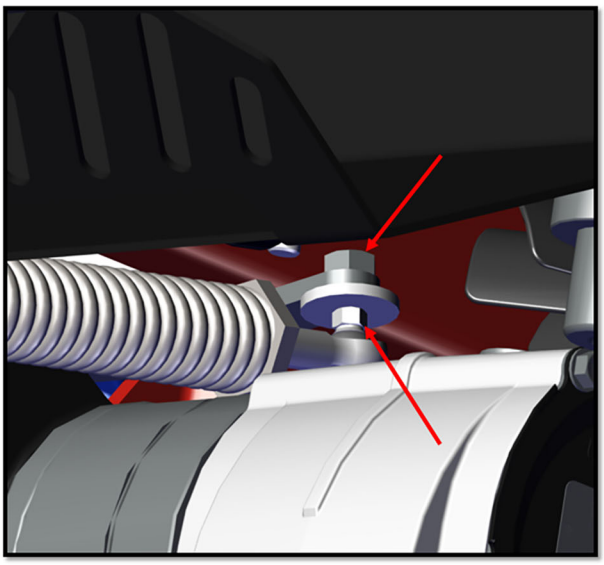

- Disconnect the ball stud on the brake spring from the caliper arm using 2- ½" wrenches.

- Remove the Parking Brake spring and rod once the ball stud is disconnected.
- Lift the caliper linkage off the ball stud.
- Slide the rod out of the trunnion.

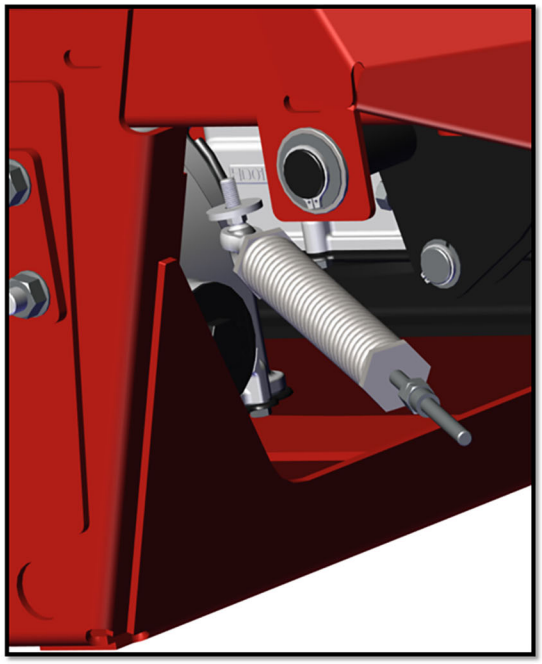

- Next remove the axle nut cotter pin from the transaxle being serviced. Discard cotter pin.

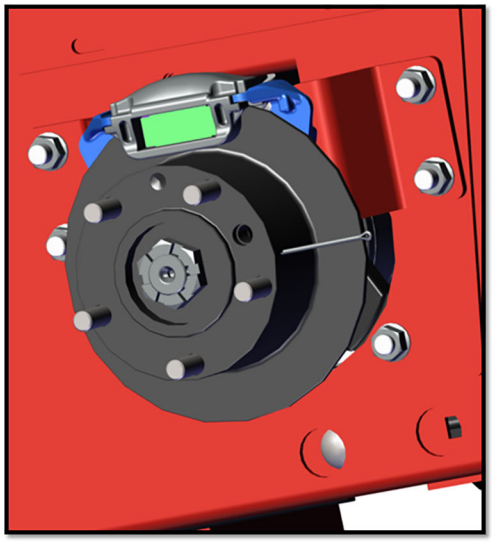

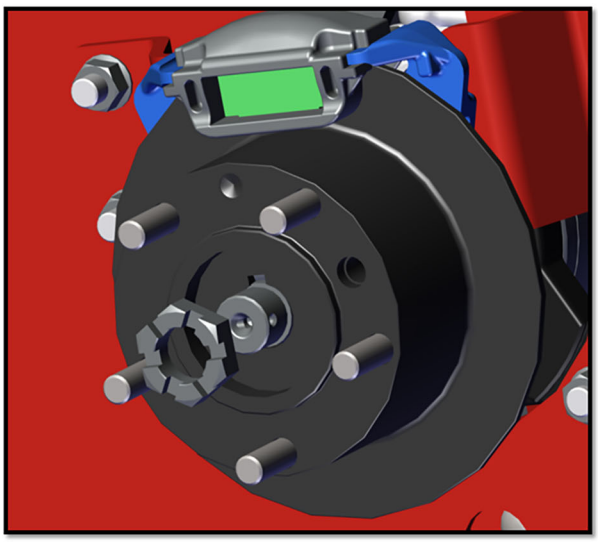

- Using an impact and a 1 ½" impact socket remove the axle nut.
- Using the hub removal tool and impact, separate the hub from the tapered axle shaft (do not pull hub completely off axle at this time).

- Using the hub removal tool and impact, separate the hub from the tapered axle shaft (do not pull hub completely off axle at this time).

- Hub Removal Tool: use Part Number 21544008

- 5 Bolt Hub Puller supplied by HydroGear



- Remove 4 through bolts and nuts holding the caliper mounting bracket to the frame (3/4" wrench/socket).

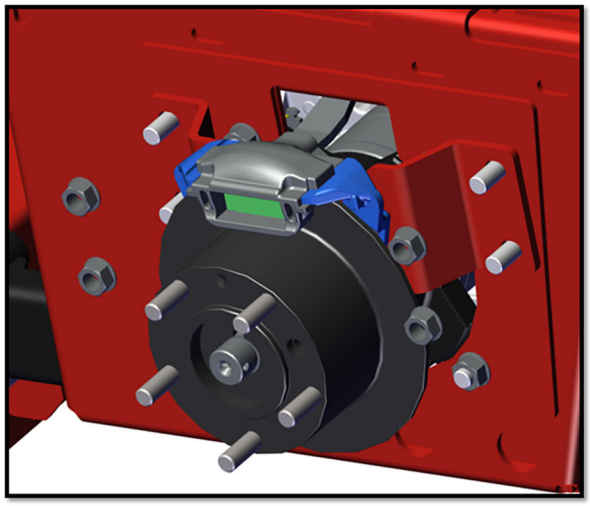

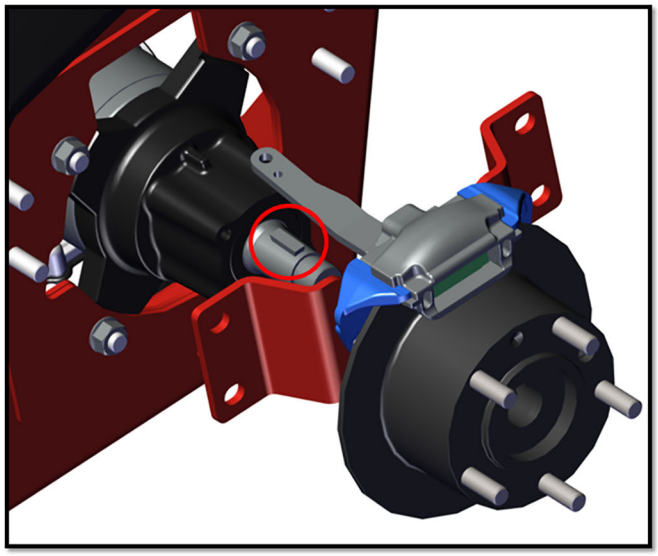

- Remove hub, caliper and caliper bracket as one assembly. Retain keyway for reassembly.
  - Note: brake pads can fall out when the rotor is removed from the caliper.

- Remove the corresponding frame bracket from R&R location.

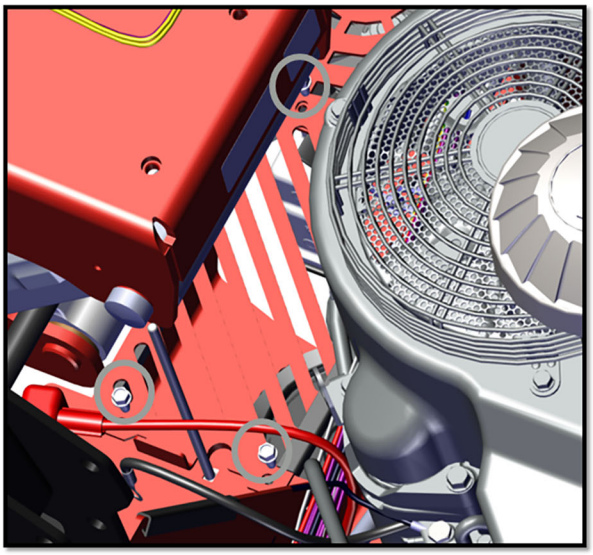

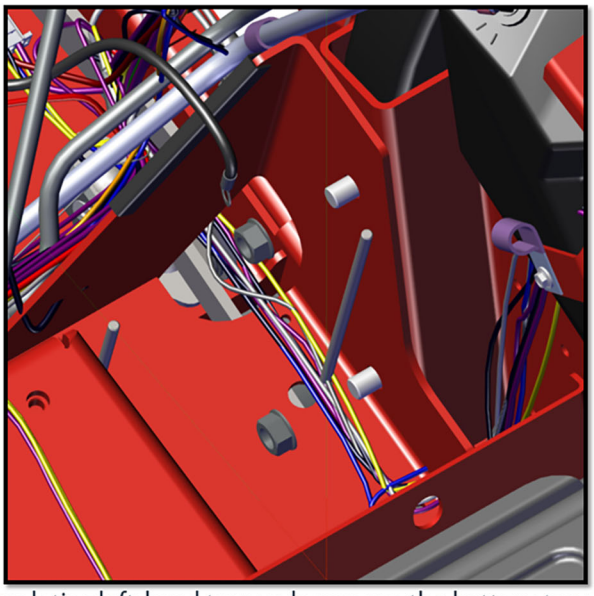

- If completing left-hand transaxle remove the battery tray.
- If completing the right-hand transaxle remove the fan guard/ ROPS gusset. Be cautious of the fuel lines when working on the right side of unit

- Now with access to the transaxle cooling fan, remove the input shaft lock nut with an impact.

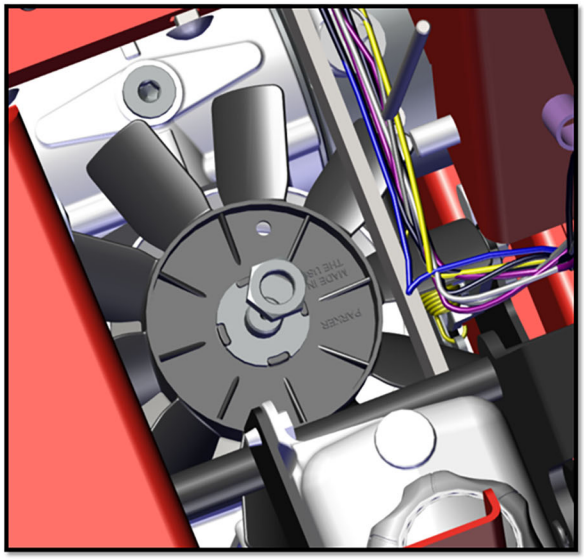

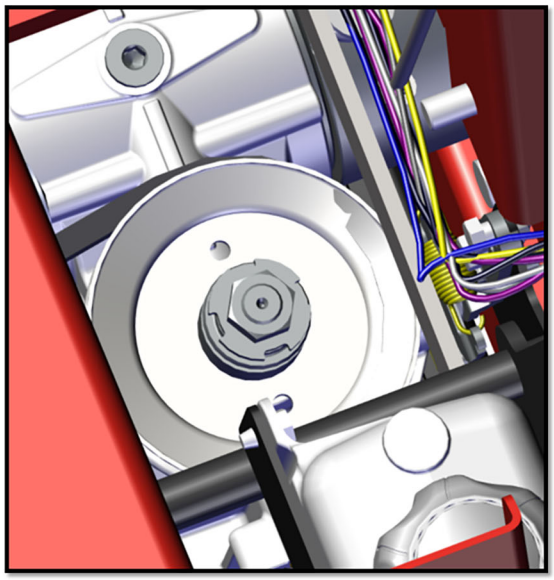

- Remove the fan (loosely reinstall the nut onto input shaft in order to protect shaft threads during removal and installation).

- Remove the two bolts and nuts that mount the speed control bracket directly to the Return to Neutral arm.
- Note the position of the hardware prior to removal for proper installation.
- Remove the bracket from the transaxle.

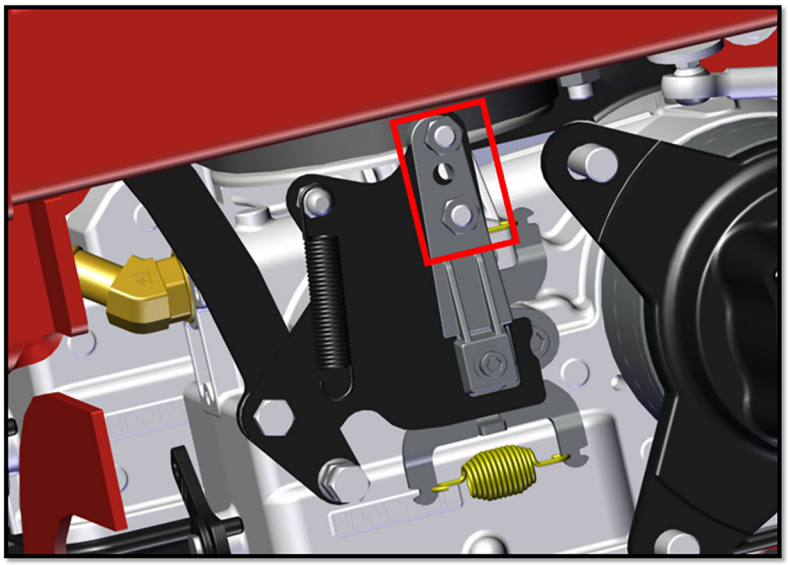

- Image here has chassis panel removed for visual clarity.

- Remove the transaxle reservoir tank use a hose clamp tool to avoid making a mess.

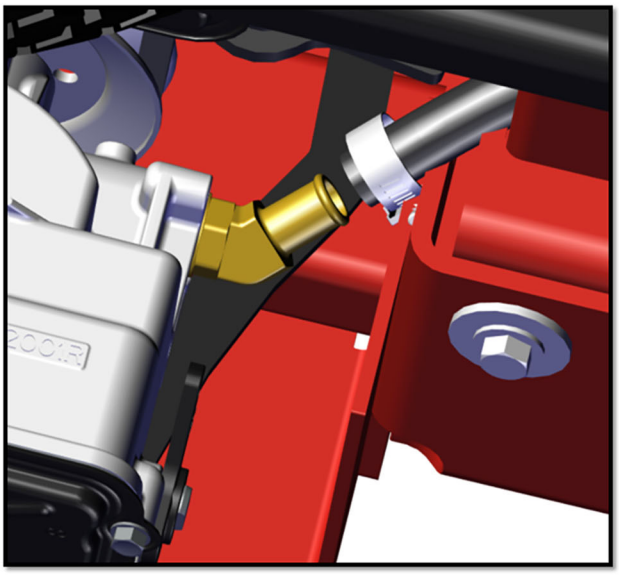

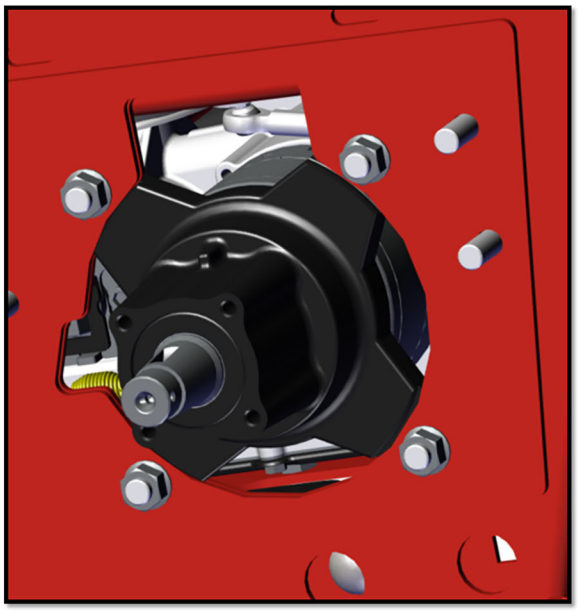

- Loosen the (4) mounting bolts of the transaxle to the frame.

- Support the transaxle and remove the 4 mounting bolts.

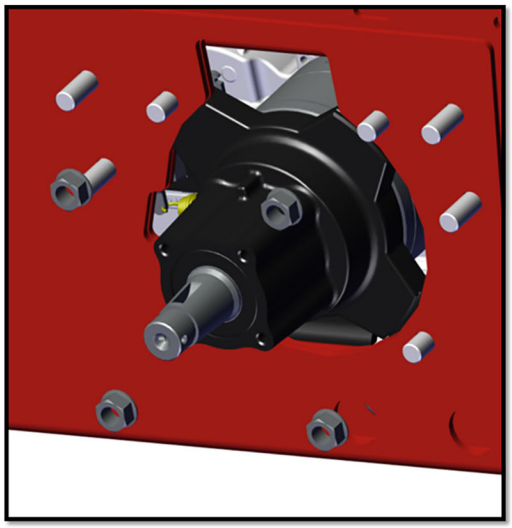

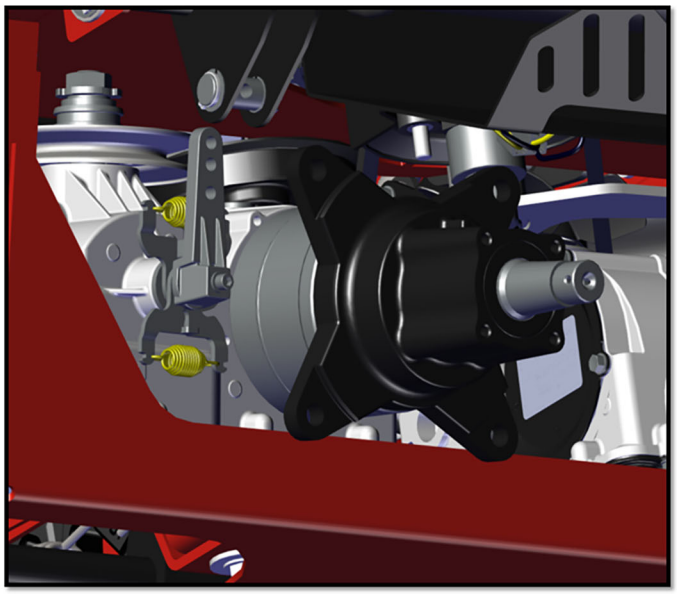

- Rotate 90 degrees and move the axle shaft to the rear opening in the frame.
- Best method found is to have the wheel motor out first from the rear opening.

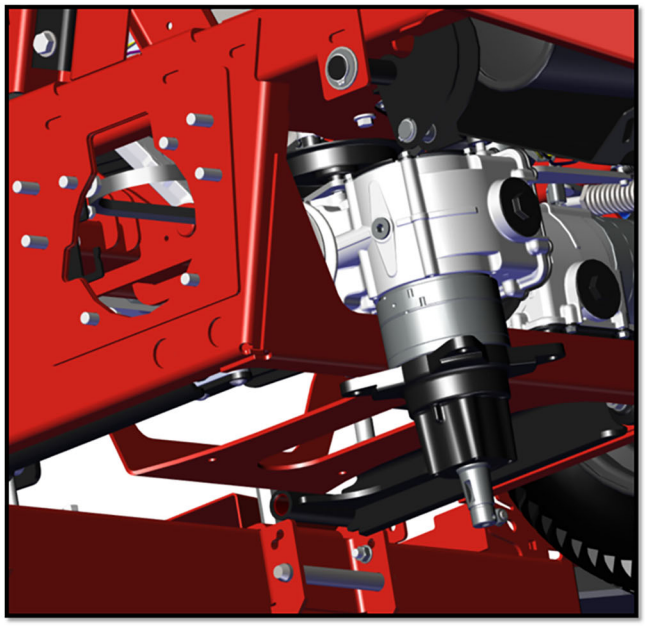

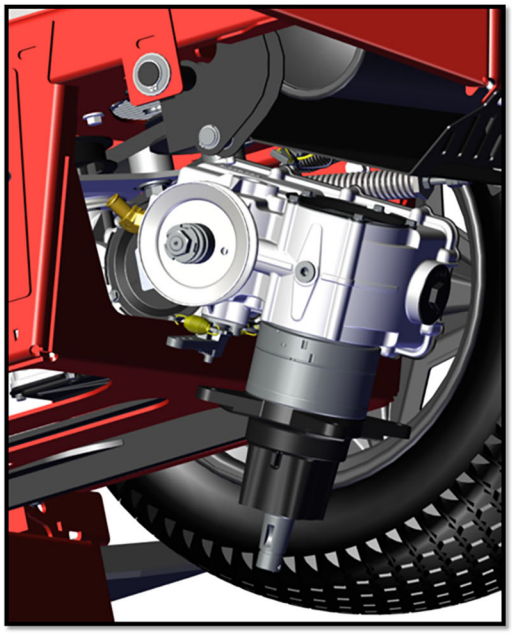

# Installation

- Install transaxle to frame in opposite order of installation.

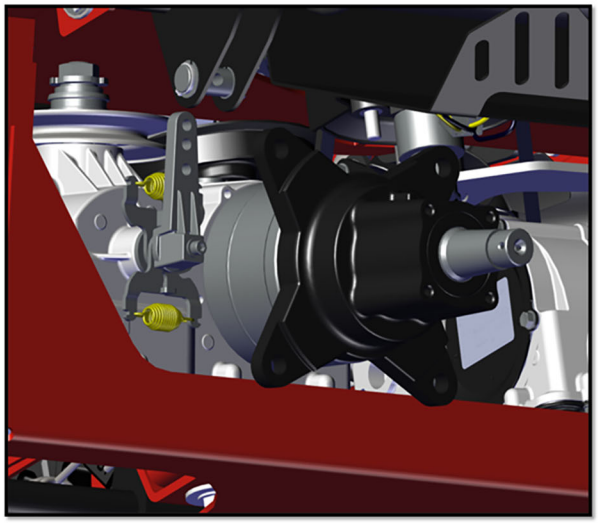

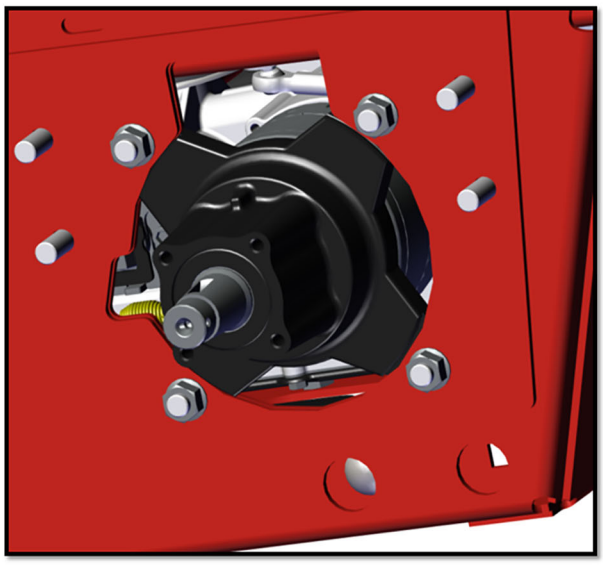

- Support transaxle and reinstall mounting hardware. Torque to 64-96 ft.–lbs.

- Reinstall the PTO clutch, keyway, spacer, and washer. Insert the mounting bolt.

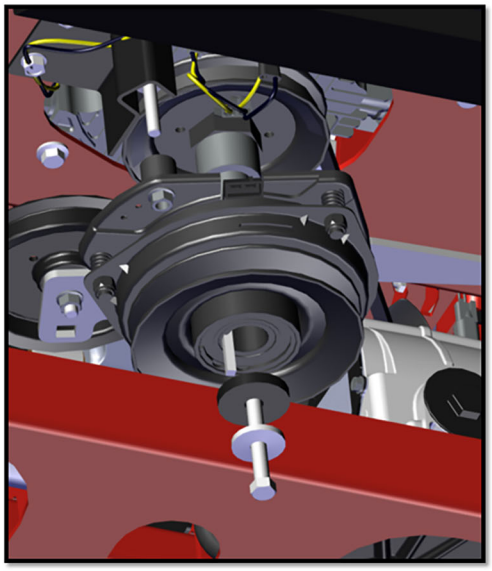

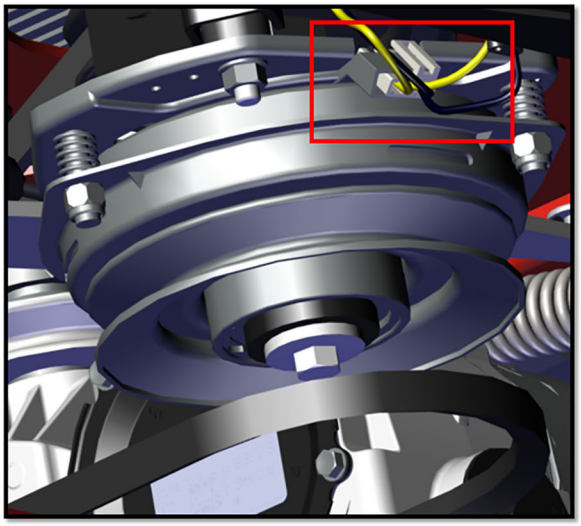

- Torque mounting hardware to 47 – 61 ft.-lbs.
- Connect the harness connector (confirm positive connection).

- Reinstall the drive belt and apply tension by securing the spring tensioner to the anchor bolt.

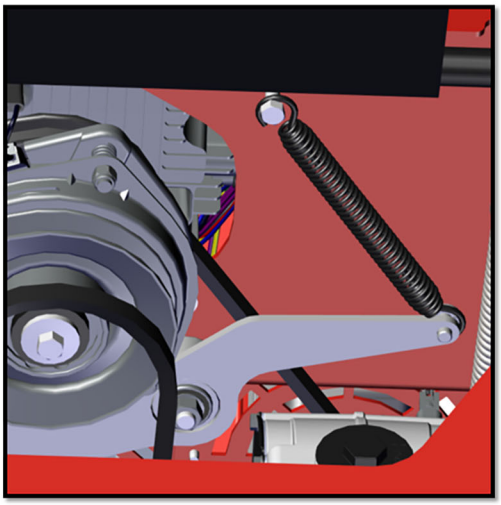

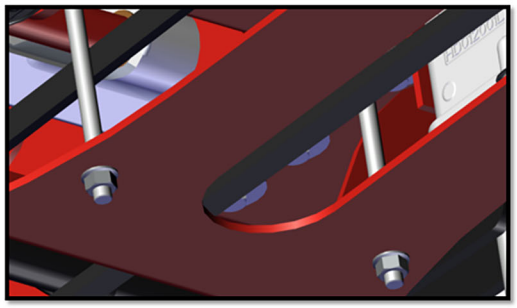

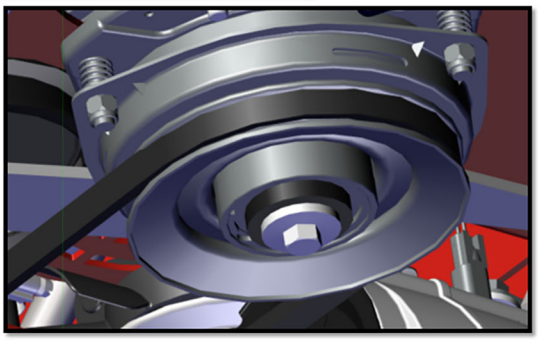

- Reinstall deck belt finger and deck belt.

- Guide the speed control bracket back into position behind the RTN arm.
- Install the two bolts and nuts that mount the bracket to the RTN arm.
- Torque to standard torque specs.

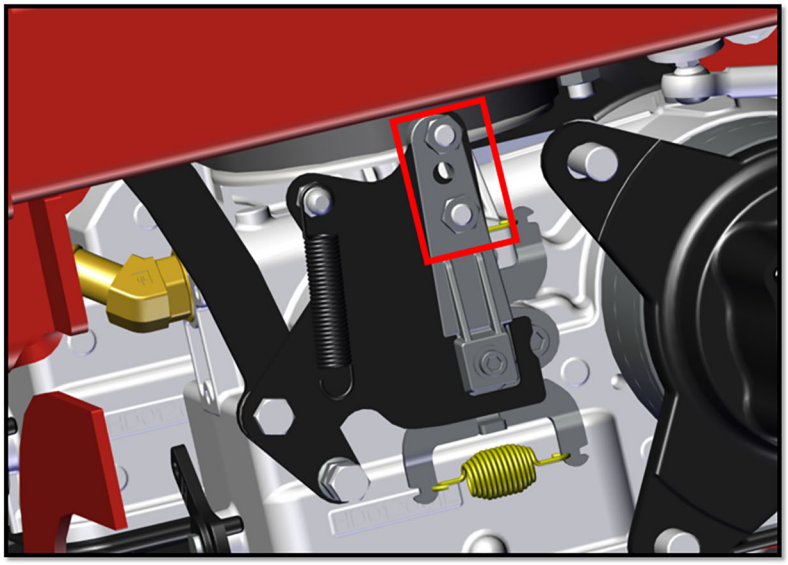

- Image here has chassis panel removed for visual clarity.

- Install transaxle reservoir tank and reconnect hose.
- Ensure all parts are free from dirt and contaminated fluid.

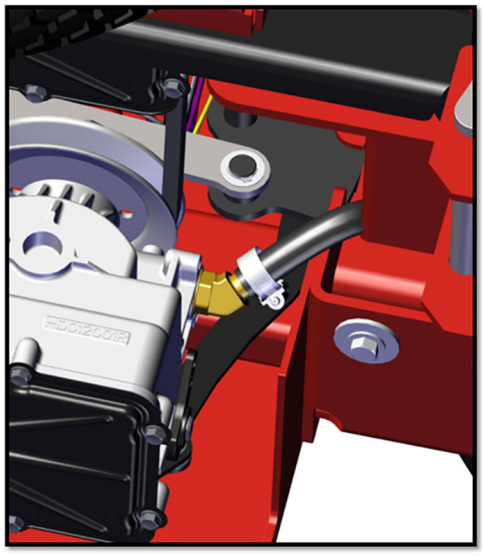

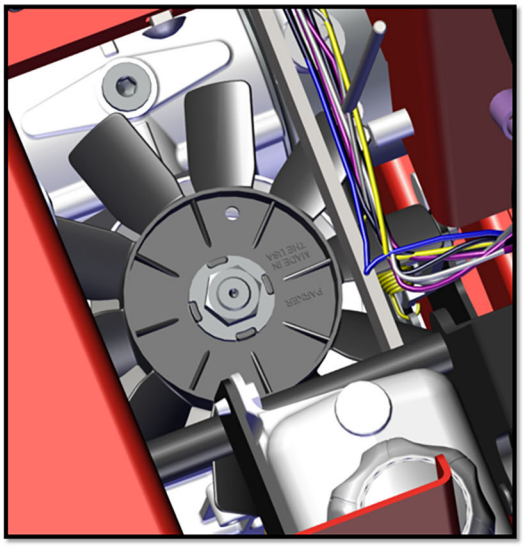

- Install transaxle cooling fan
- Use Loctite type 232 on input shaft threads and torque to 55-70 ft.-lbs.
- Use a strap wrench or similar to hold sheave in place.

- Install battery tray (LH side) or fan guard/ROPs gusset (RH side)
- Be cautious of fuel lines when working on RH side of unit
- Use standard torque specs for hardware type/size

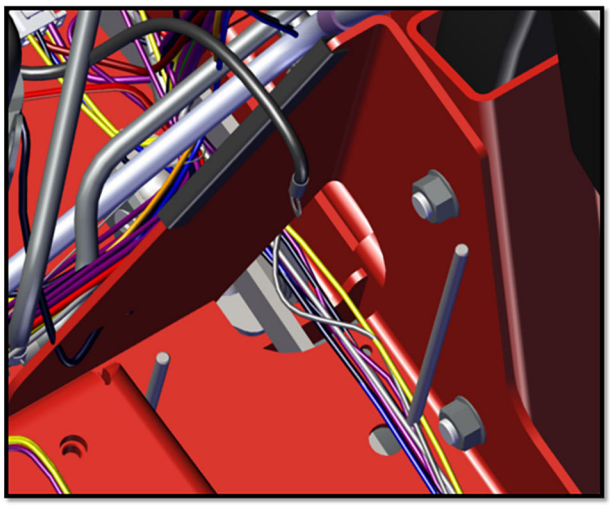

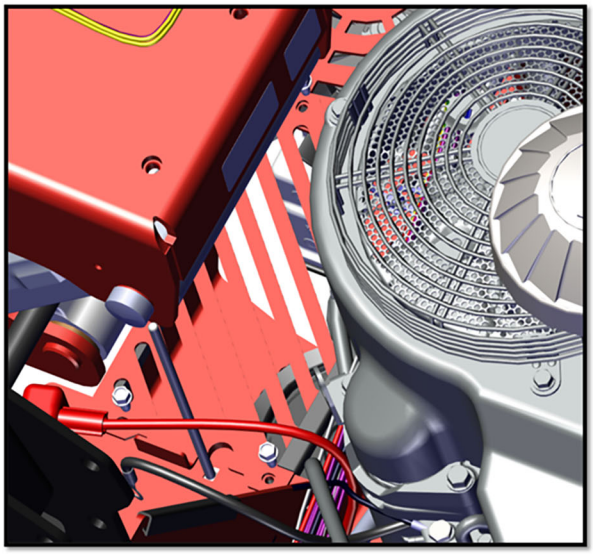

- Reinstall central frame bracket over cooling fans with 4 bolts.

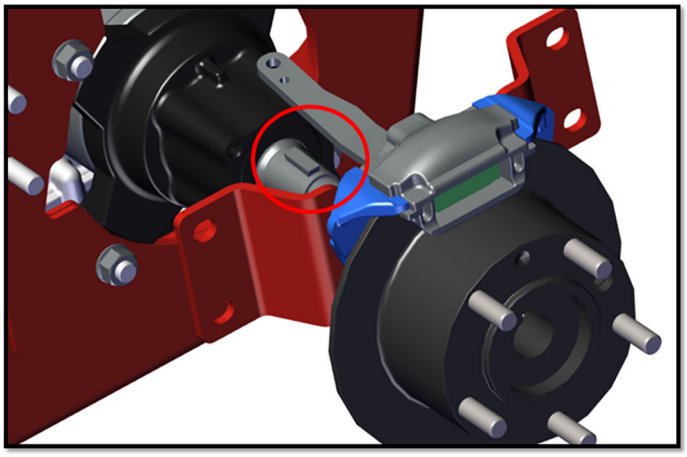

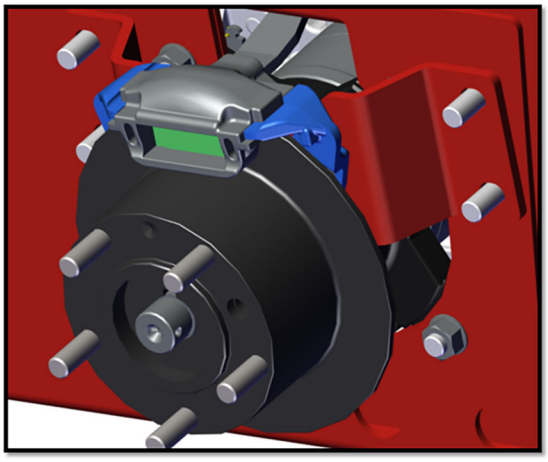

- Install keyway in axle.
- Install hub, brake pads, caliper, and caliper bracket as one assembly (just as removed).
- Line up hub keyway with axle keyway when installing.
- Note: do not lift caliper off rotor as this will allow the brake pads to possibly fall out.

- Install the axle nut and snug with a ratchet and socket to retain hub in place.

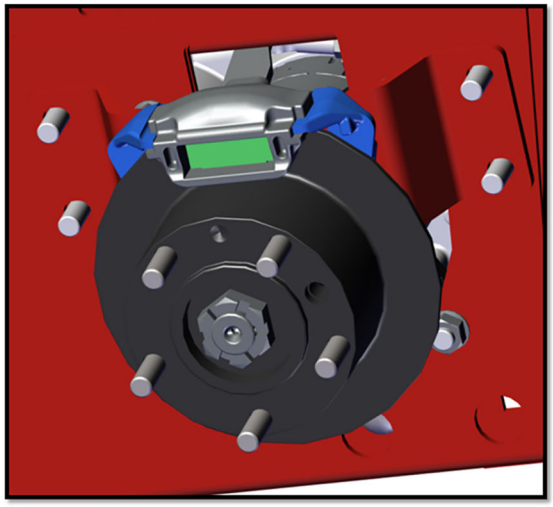

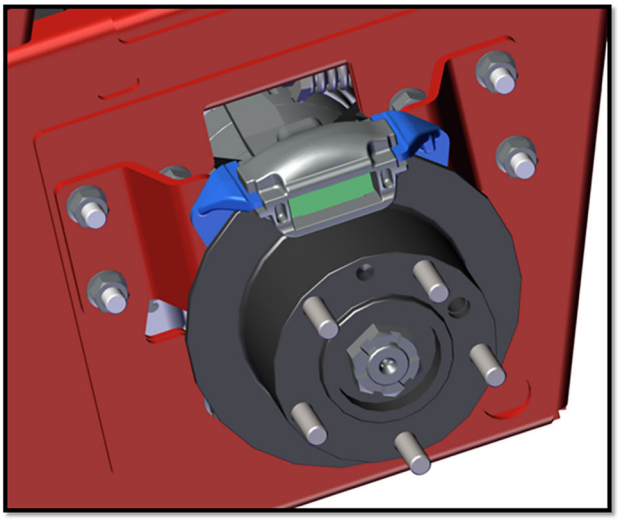

- Reinstall the 4 through bolts and nuts for caliper mounting bracket to frame.
- Torque to 64 – 96 ft. –lbs.

- Install the parking brake assembly in the trunnion and then reconnect the ball stud to the caliper arm.

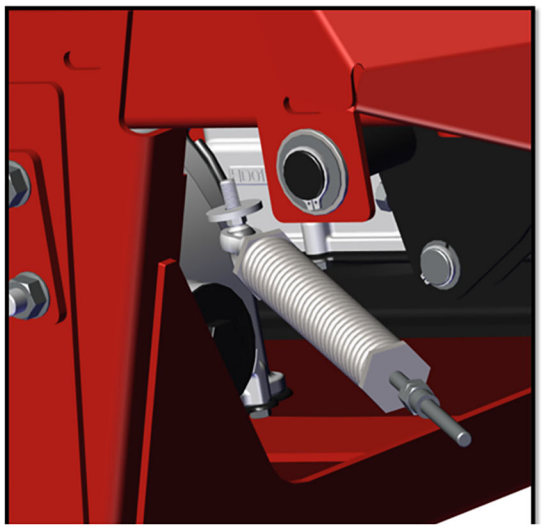

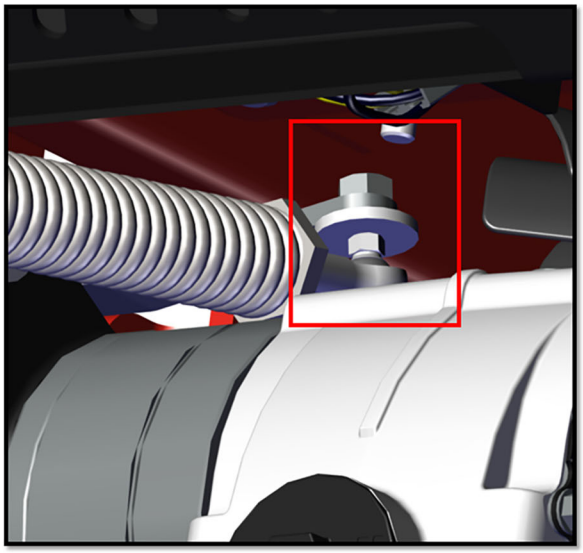

- Install the rear adjustment nut to the parking brake spring assembly.

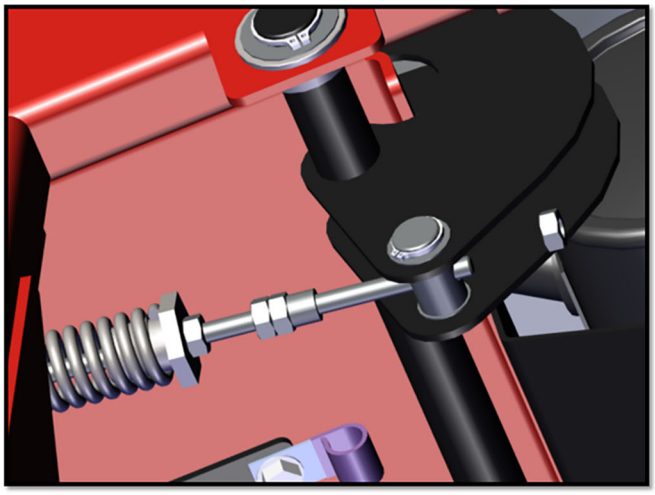

3. Tighten nut behind trunnion until spring measures between 21.4 cm (8 7/16") - 21.7 cm (8 9/16").
4. Engage and disengage brake several times. Check spring measurement to ensure it is within specified adjustment.

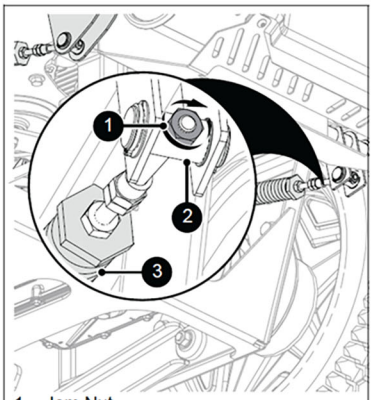


1. Jam Nut
2. Trunnion
3. Compression Spring

- Adjust the parking brake per adjustment procedure (listed in owners manual and class textbook).

- Install wheel spacer.

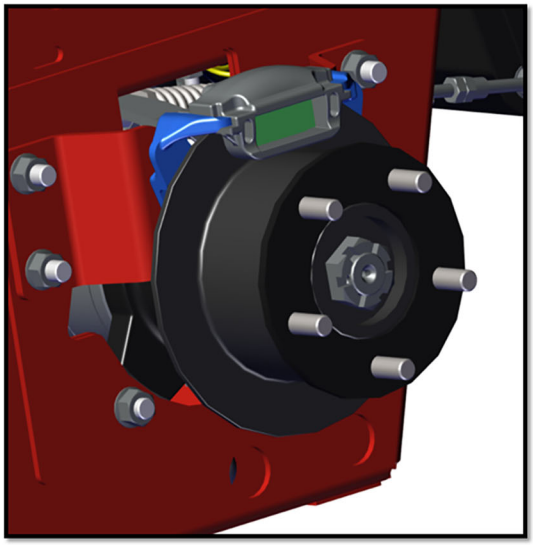



- Install wheel on hub and torque lug nuts to 60-90 ft. – lbs.

- Lower unit to ground.
- Torque the axle nut to 200 ft. – lbs.
- If cotter pin does not line up continue to tighten axle nut until the hole lines up.
- DO NOT loosen the nut to align the notch with the hole.
- Install and bend cotter pin.



- Install battery and hold down bracket (if previously removed).

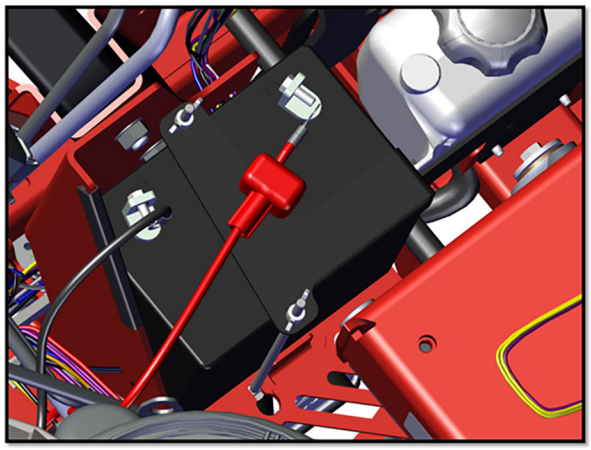

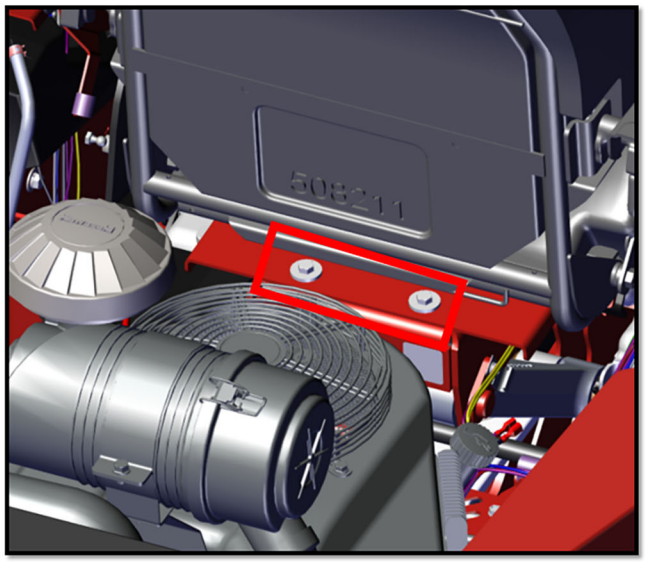

- Flip seat down by releasing side pin and reinstall the 2 seat plate bolts.

- Fill the transaxle reservoir to the proper level letting the air bleed from the system.
- You can also loosen the top fill plug on the transaxle to help the process if transaxle is completely empty.
- Follow the purging procedure identified in the Pro-Turn 600 Interactive Service Manual.
- Once purging is complete, verify operation and fluid levels.




# Key Take-Aways

- Understand the procedure for removing and installing the HTG transaxle from the lower bottom side of the unit.
- Identify any special tools required to complete the procedure as well as safety tips.
- Know all proper torque specifications for installation of the transaxle.

# HTG Transmission Overview

## Pro-Turn 600



# HTG Interior Cut-Away

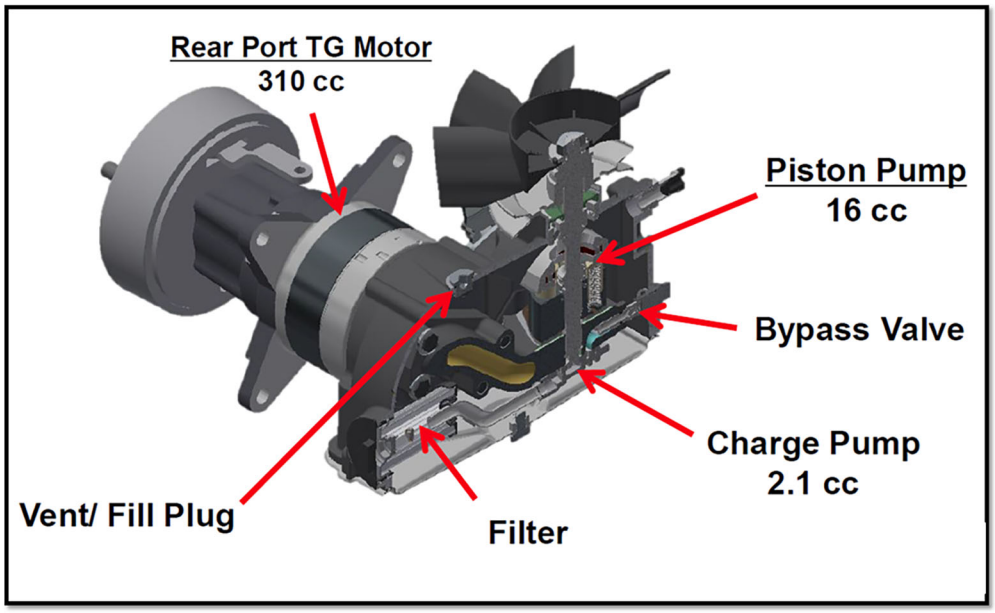


# Pump Section Assembly

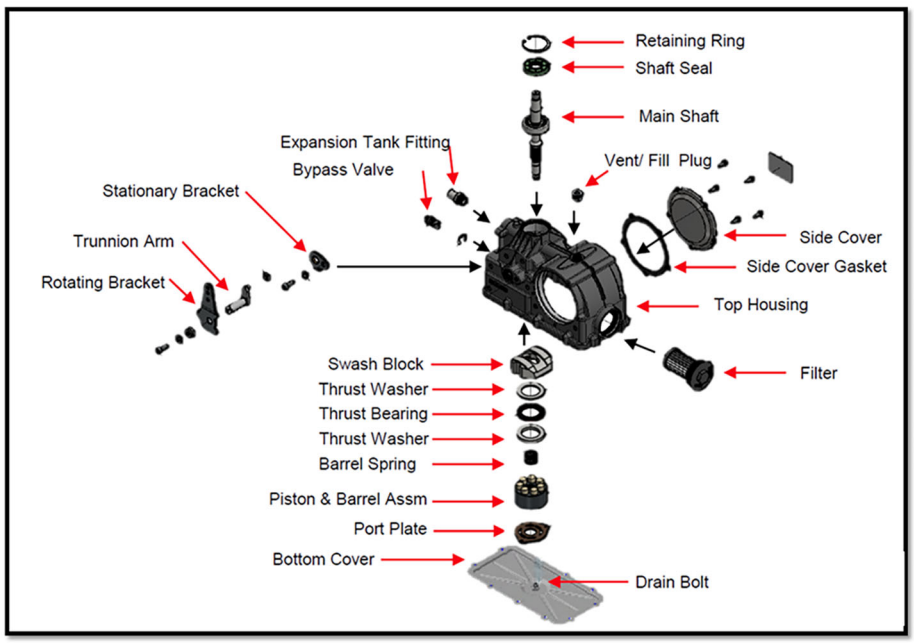

# Endblock Assembly

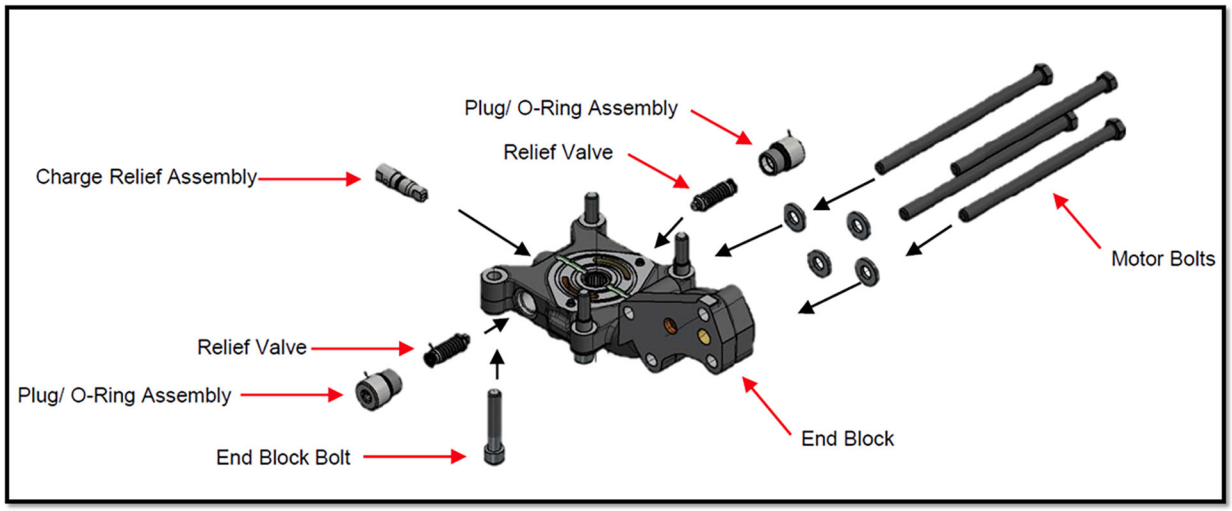


# Charge Pump Assembly

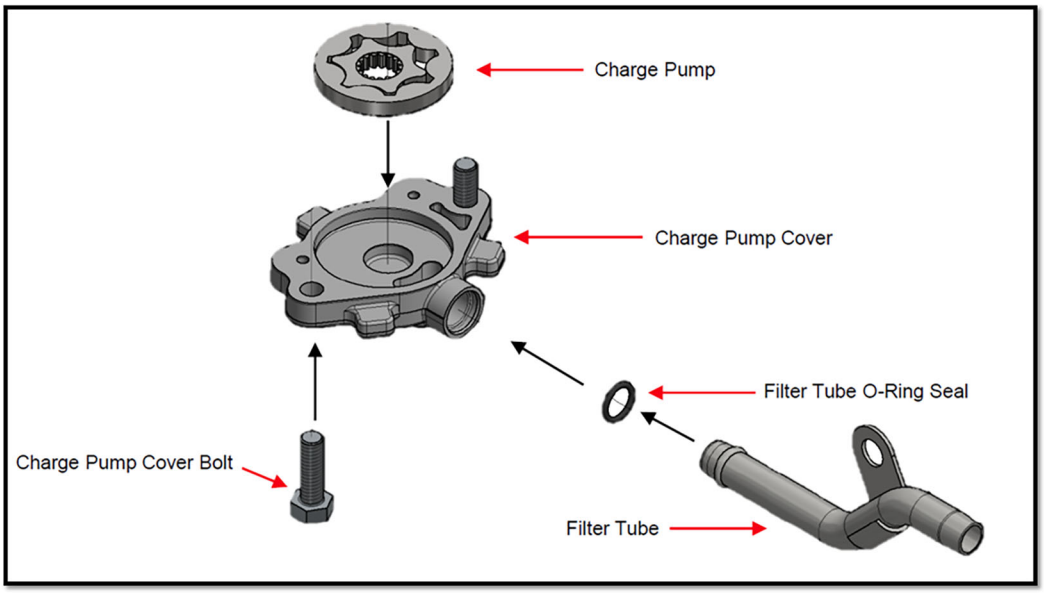

# Motor Components

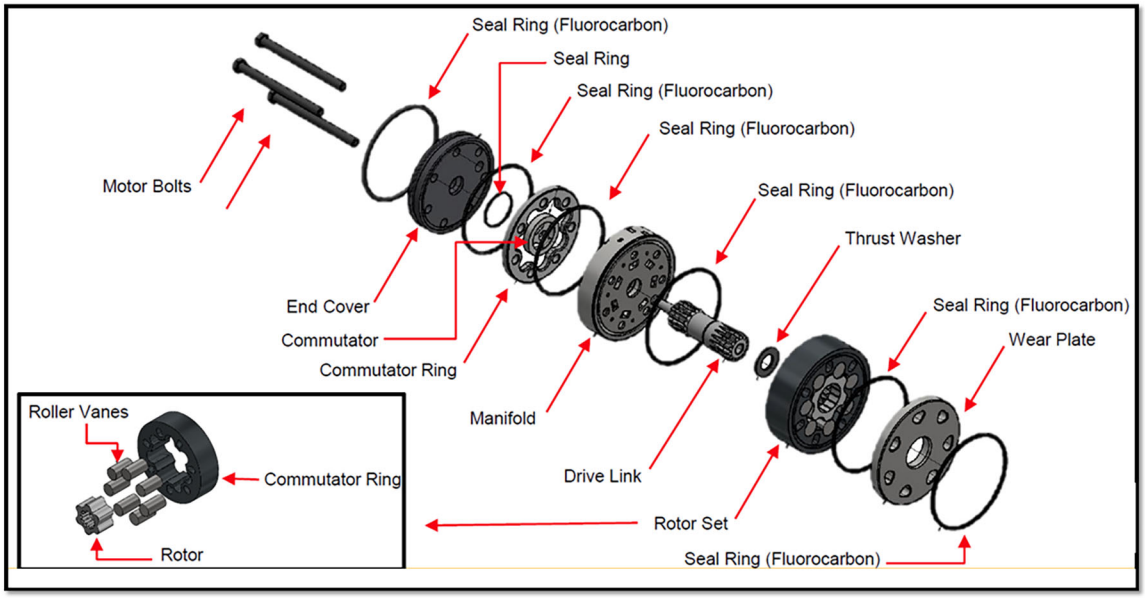


# Motor Housing Sub-Assembly

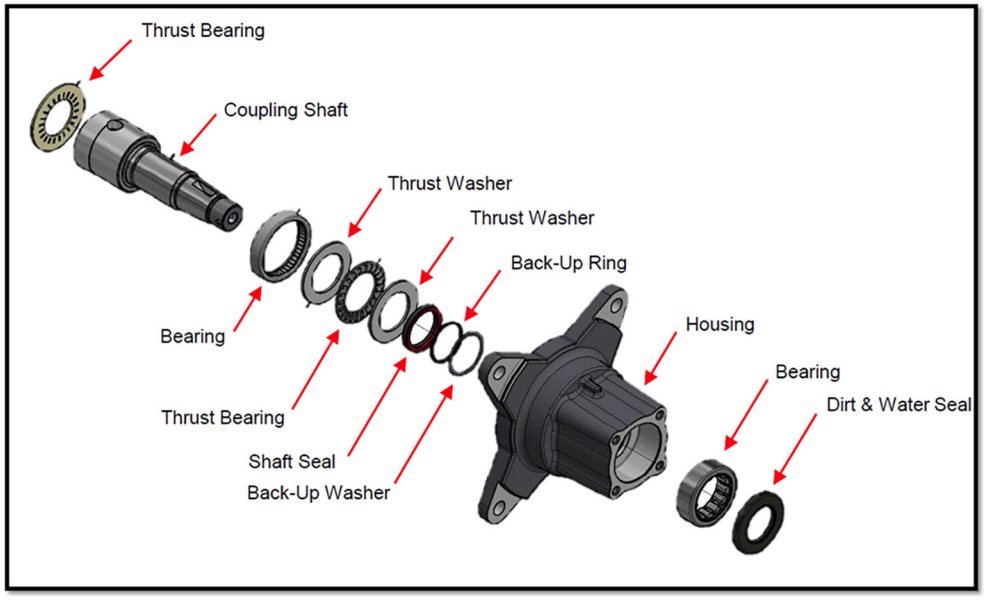

# Parker HTG Transmission Service Manual

- Troubleshooting Guide
- Required Tools List
- Maintenance Tips
- Torque Specifications
- Assembly Views
- Service Kit Information
- Disassembly and Assembly Procedures
- Available on Interactive Service Manual

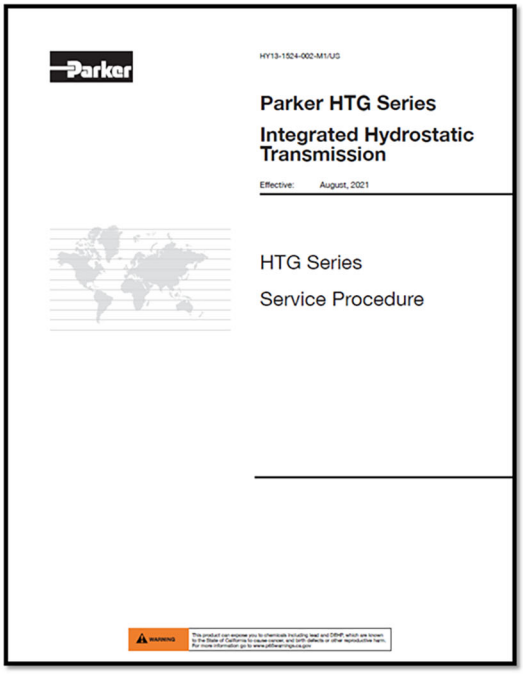


# Service & Maintenance

- Parker HT-1000™ Oil is preferred choice.
  - Use Parker qualified oils. Will change maintenance intervals.
- Initial Break-In at 300 hours; every 1,000 hours thereafter.
  - Change Oil Filter with every oil change.
- Parker Oil Change Video available on Interactive Service Manual.
- Oil Options
  - Oil Service Kit (70724100)
  - 1 Gallon (00058400)
  - 1 Quart (00058500)




| Qualified Oils | Number of hours |
|---|---|
| Parker HT-1000™ (P/N 406030) 1U.S. Gal. (3.8L) | 1000 |
| Castrol Syntec 5W50 | 500 |
| Amsoil AW ISO 68 | 500 |
| Shell TTF-SB | 500 |
| Other* | 250 |

# Service & Maintenance

- A variety of service kits are listed on the HTG Service Manual.
- Transmission Seal and Motor Seal Kits are required for service/disassembly.

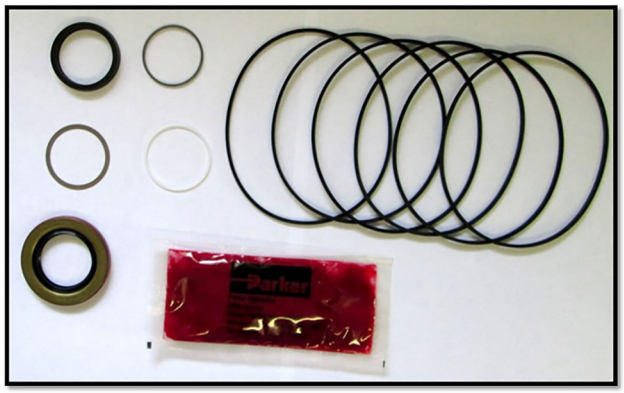

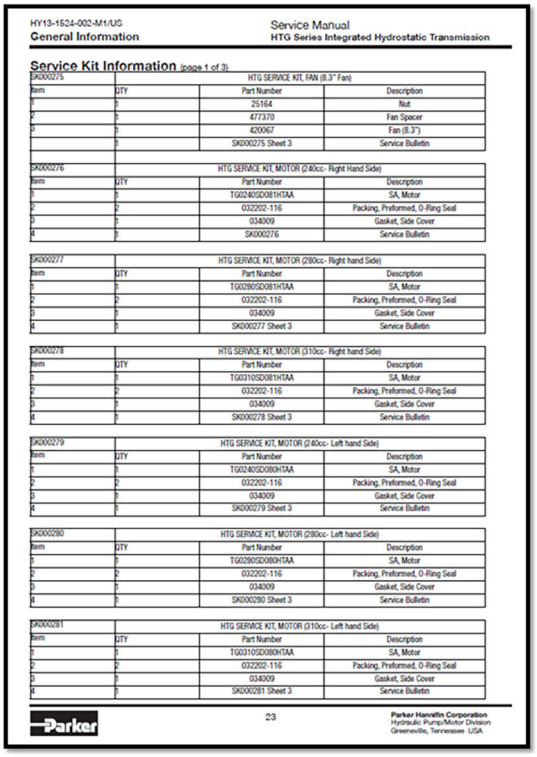

HY13-1524-002-M1/US
General Information

Service Manual
HTG Series Integrated Hydrostatic Transmission

**Service Kit Information** (page 1 of 3)

| SK000275 | HTG SERVICE KIT, FAN (8.3" Fan) | | |
|---|---|---|---|
| Item | QTY | Part Number | Description |
| 1 | 1 | 25164 | Nut |
| 2 | 1 | 477370 | Fan Spacer |
| 3 | 1 | 420067 | Fan (8.3") |
| | 1 | SK000275 Sheet 3 | Service Bulletin |

| SK000276 | HTG SERVICE KIT, MOTOR (240cc- Right Hand Side) | | |
|---|---|---|---|
| Item | QTY | Part Number | Description |
| 1 | 1 | TG02405D081HTAA | SA, Motor |
| 2 | 2 | 032202-116 | Packing, Preformed, O-Ring Seal |
| 3 | 1 | 034009 | Gasket, Side Cover |
| 4 | 1 | SK000276 | Service Bulletin |

| SK000277 | HTG SERVICE KIT, MOTOR (280cc- Right hand Side) | | |
|---|---|---|---|
| Item | QTY | Part Number | Description |
| 1 | 1 | TG02805D081HTAA | SA, Motor |
| 2 | 2 | 032202-116 | Packing, Preformed, O-Ring Seal |
| 3 | 1 | 034009 | Gasket, Side Cover |
| 4 | 1 | SK000277 Sheet 3 | Service Bulletin |

| SK000278 | HTG SERVICE KIT, MOTOR (310cc- Right hand Side) | | |
|---|---|---|---|
| Item | QTY | Part Number | Description |
| 1 | 1 | TG03105D081HTAA | SA, Motor |
| 2 | 2 | 032202-116 | Packing, Preformed, O-Ring Seal |
| 3 | 1 | 034009 | Gasket, Side Cover |
| 4 | 1 | SK000278 Sheet 3 | Service Bulletin |

| SK000279 | HTG SERVICE KIT, MOTOR (240cc- Left hand Side) | | |
|---|---|---|---|
| Item | QTY | Part Number | Description |
| 1 | 1 | TG02405D080HTAA | SA, Motor |
| 2 | 2 | 032202-116 | Packing, Preformed, O-Ring Seal |
| 3 | 1 | 034009 | Gasket, Side Cover |
| 4 | 1 | SK000279 Sheet 3 | Service Bulletin |

| SK000280 | HTG SERVICE KIT, MOTOR (280cc- Left hand Side) | | |
|---|---|---|---|
| Item | QTY | Part Number | Description |
| 1 | 1 | TG02805D080HTAA | SA, Motor |
| 2 | 2 | 032202-116 | Packing, Preformed, O-Ring Seal |
| 3 | 1 | 034009 | Gasket, Side Cover |
| 4 | 1 | SK000280 Sheet 3 | Service Bulletin |

| SK000281 | HTG SERVICE KIT, MOTOR (310cc- Left hand Side) | | |
|---|---|---|---|
| Item | QTY | Part Number | Description |
| 1 | 1 | TG03105D080HTAA | SA, Motor |
| 2 | 2 | 032202-116 | Packing, Preformed, O-Ring Seal |
| 3 | 1 | 034009 | Gasket, Side Cover |
| 4 | 1 | SK000281 Sheet 3 | Service Bulletin |

Parker

23

Parker Hannifin Corporation
Hydraulic Pump/Motor Division
Greeneville, Tennessee USA

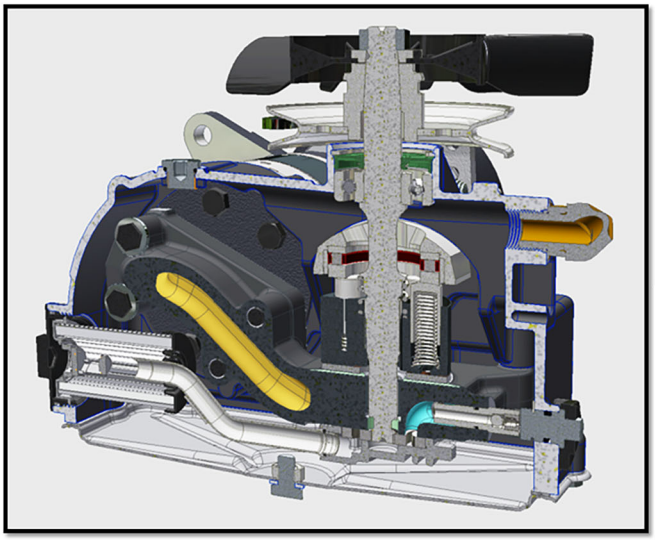

Pump Group Cut-Away

Charge Pump and Filter

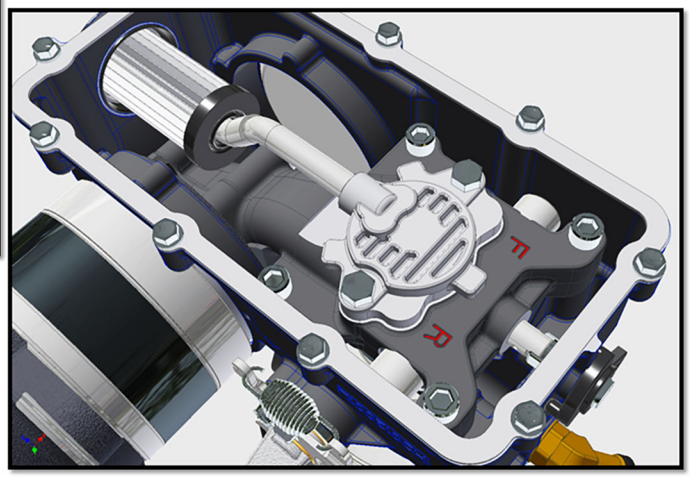

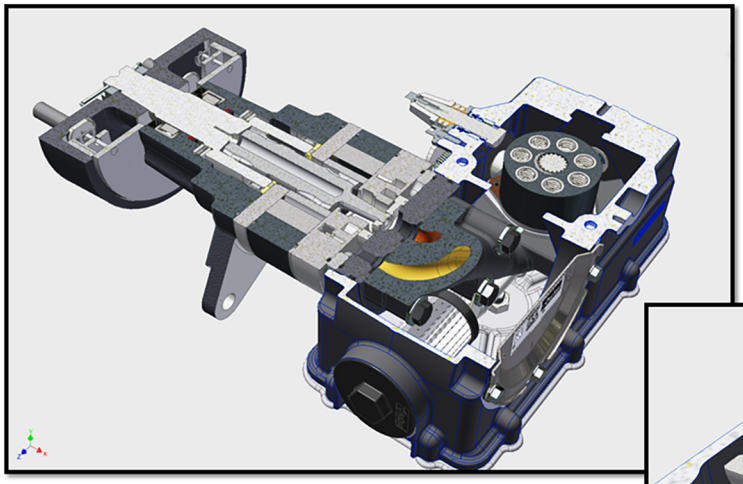

Pump Group Cut-Away

Endblock Cut-Away

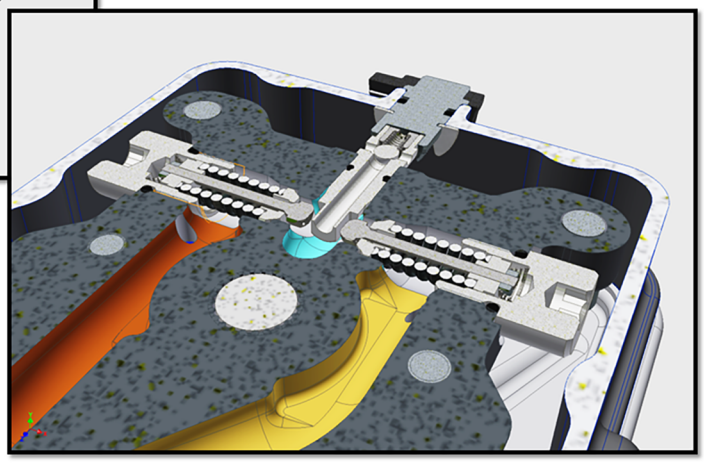

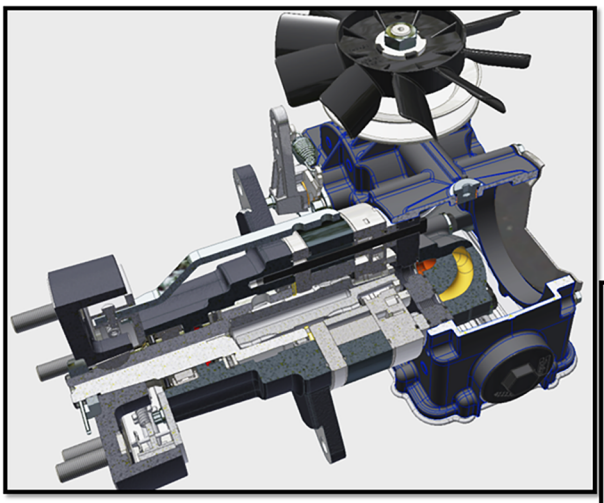

Motor Cut-Away

Pump Group Cut-Away

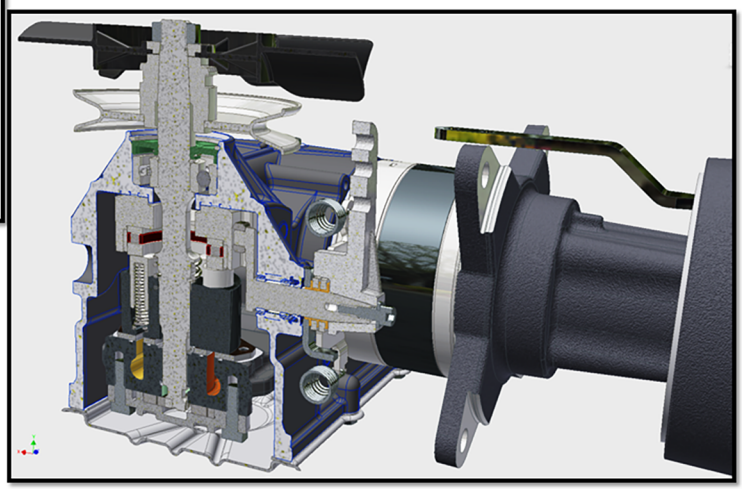

# Failure Analysis

## HTG Oil Related Failures

**Failure-** Transmission Oil Overfilled
- **Cause-** During transmission service oil is overfilled
- **Result-** Oil leaks out of the expansion tank

**Failure-** Contaminated oil
- **Cause-** Water in the oil
- **Result-** Milky colored oil, slow controls reaction (spongy feel), internal components can rust

**Failure-** Unapproved type of transmission oil
- **Cause-** Incorrect oil used during transmission service
- **Result-** Premature wear of transmission components significantly reducing the transmission life expectancy

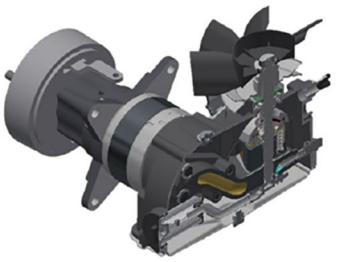



Contaminated Oil

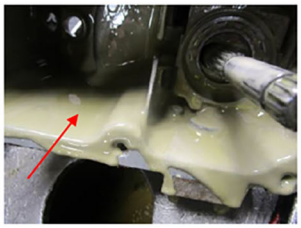

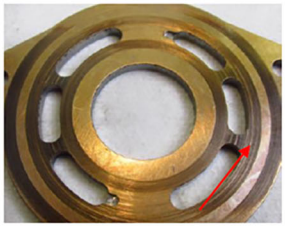

Component Wear

Parker

## 1. Pulley and Fan Failures

**Failure-** Cracked fan/ fan blades
- **Cause-** Sticks/ debris contacts and damages fan
- **Result-** Decreased cooling ability and increased transmission temperature

**Failure-** Top seal damage
- **Cause-** Debris (string/ wire) wraps around the shaft under the pulley
- **Result-** Compromised shaft seal resulting in a leak

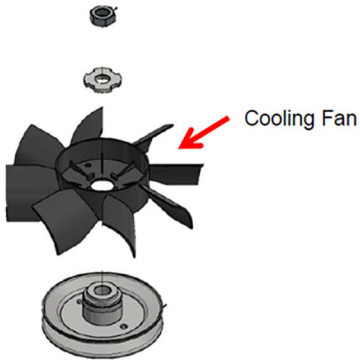






Broken Fan Blades





Debris wrapped on shaft

Parker

## 2. Pump Section Failures

- **Failure**- Transmission Oil Leaks
  - **Cause**- Side cover gasket, bottom cover gasket, bypass valve gasket, top seal could fail
  - **Result**- Oil leaking from gaskets
- **Failure**- Cracked Transmission Filter Cap
  - **Cause**- Over tightening during service or blunt contact with sticks or debris
  - **Result**- Oil leaking from filter cap
- **Failure**- Port Plate Scoring
  - **Cause**- Internal contamination
  - **Result**- Scoring of the port plate- loss of performance, heat increases

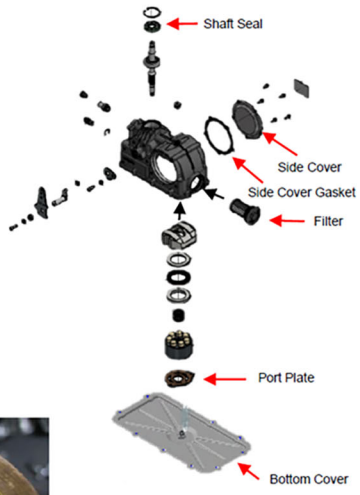




Leaking Gasket



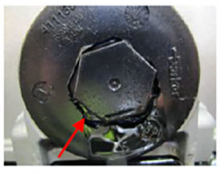

Cracked Filter Cap



Port Plate Scoring

Parker

## 3. Endblock Failures

**Failure**- Relief Valve Fails (Not Very Common)
- **Cause**- Constant forward/reverse of valve can wear and the tip can break off
- **Result**- Erratic/ jerky movement of the machine, poor drivability

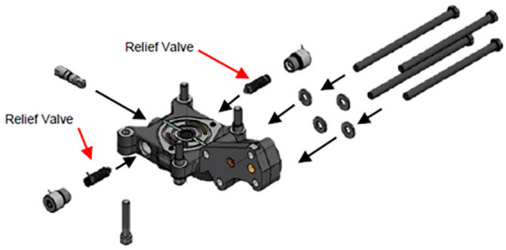






Broken Relief Valves

Parker

## 4. Charge Pump Failures

**Failure**- No common failures of the charge pump

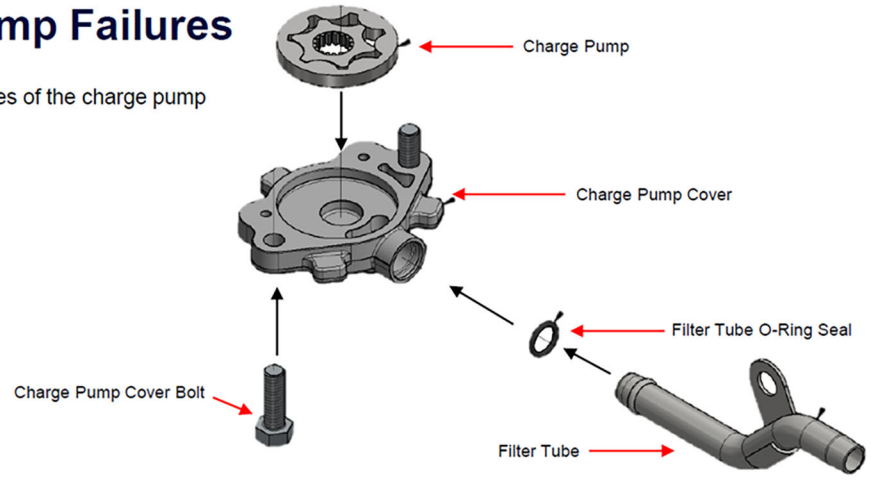


## 5. Motor Failures

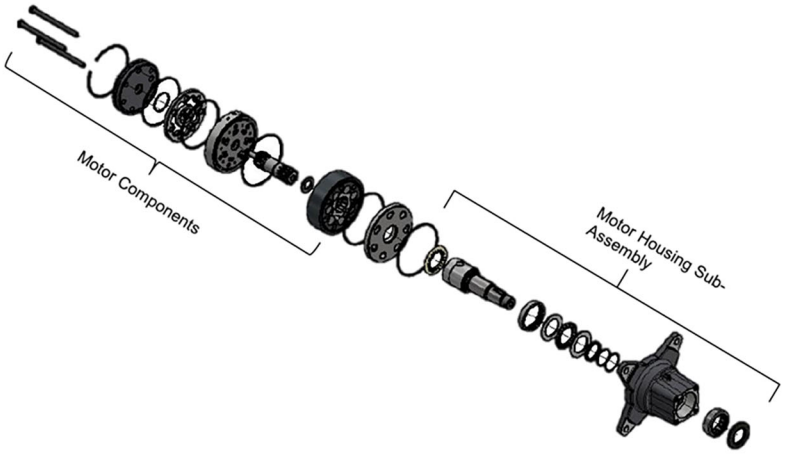

## 5. Motor Component Failures

**Failure-** Leaks
- **Cause-** Section seal failure
- **Result-** Wetting around damaged seal

**Failure-** Drive Link/ Rotor Set Damage
- **Cause-** Fan damage, oil breakdown causing transmission overheating
- **Result-** Premature wear to drive link/ rotor set



Section Seal Leak

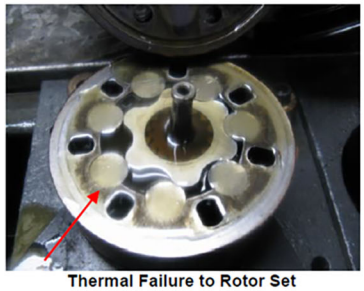

Thermal Failure to Rotor Set

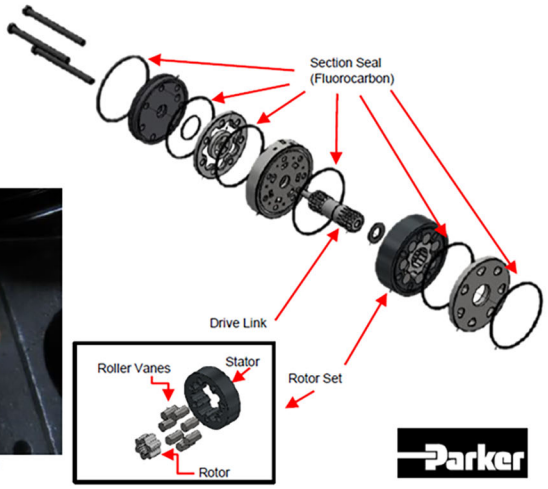


Parker

## 5. Motor Housing Failures

**Failure-** Leak
- **Cause-** High pressure shaft seal fails
- **Result-** Allows fluid to leak into the motor housing chamber (where bearing is located) causing leaking out of the dirt and water seal



Leaking Seal

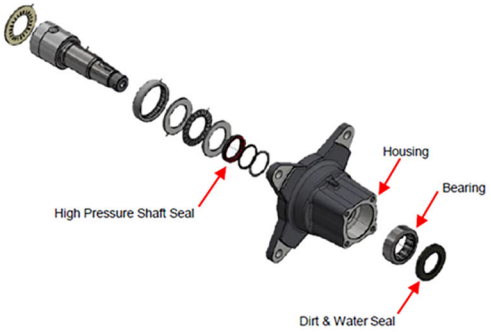


Parker

## 6. Brake Assembly

**Failure-** Loose Castle Nut
- **Cause-** Cotter pin removed during service/ Cotter pin broken or lost/ nut not re-torqued after service
- **Result-** Taper lock lost hub/ wheel comes loose/ Shaft damage/ Shaft breaks
- **Note:** In the event of hub removal, hub must be installed dry and torqued to proper torque using no lubricant

**Failure-** Improper Brake Adjustment
- **Cause-** End user/ technician adjustment or linkage damage
- **Result-** Brake drag, steering mis-match (pulling to one side)
- **Note:** Brakes are at proper adjustment when installed during transmission assembly. Rarely do they need further adjustment during the life of the transmission

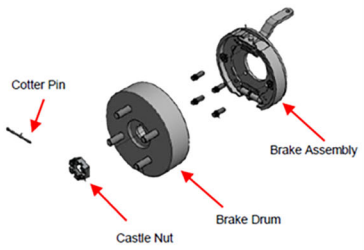






Loose Castle Nut Damage





Pre- Mature Brake Wear

Parker

# Key Take-Aways

- Understand what information is available on the HTG Service Manual and where to access it.
- A variety of failures have been identified by Parker. Information provided in this presentation have documented how to diagnose those issues.

# HTG Transmission Disassembly

## Pro-Turn 600



# Parker Transaxle

- The model and serial number of the transaxle is on the paper decal glued to the plate.

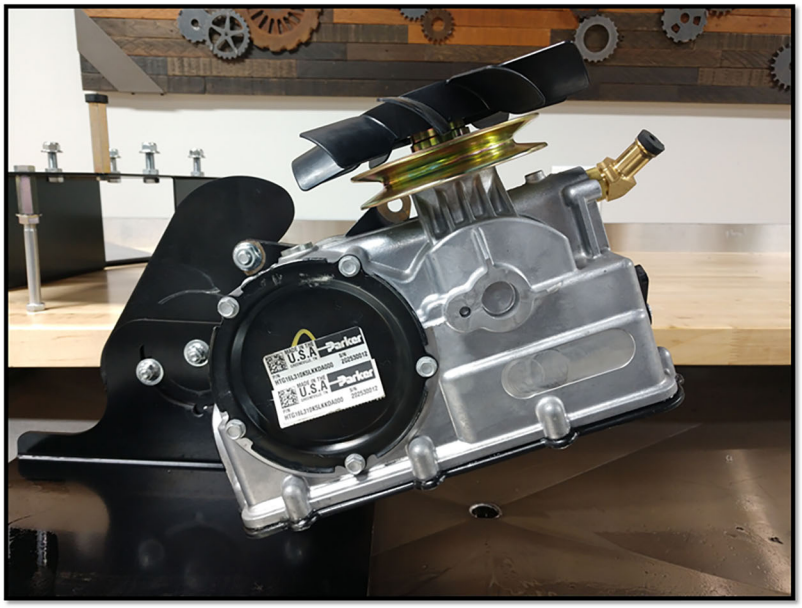


- Dump valve arm on the front of the transmission.
- Above the valve is the expansion tank port.

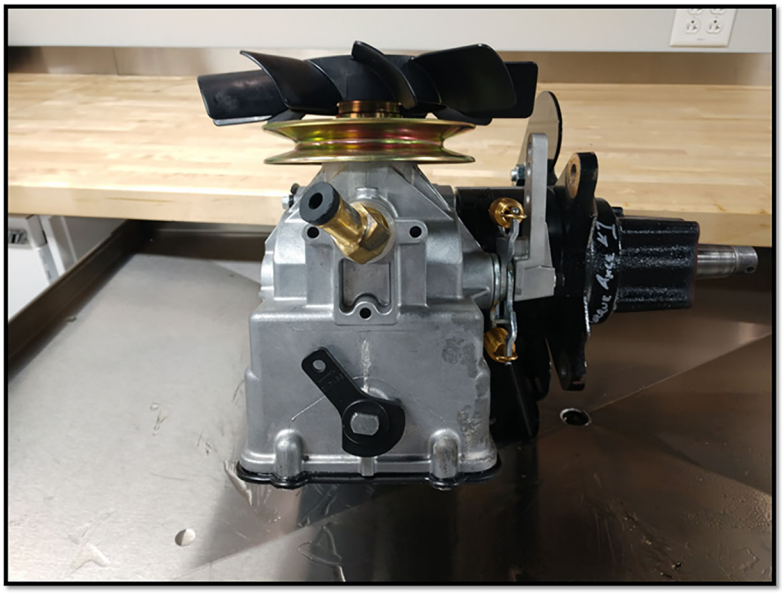

- Shift linkage with two return to neutral springs.

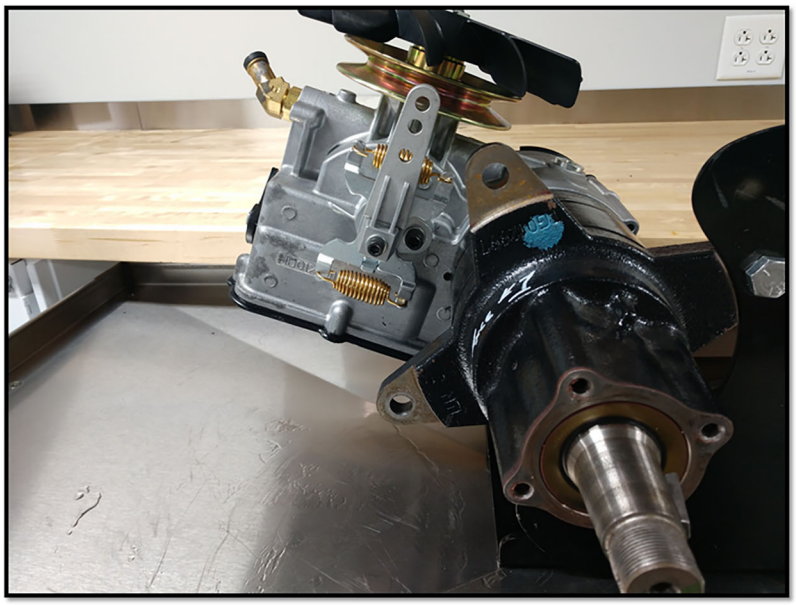

- Wheel axle with the wheel hub removed and the key still in the shaft.

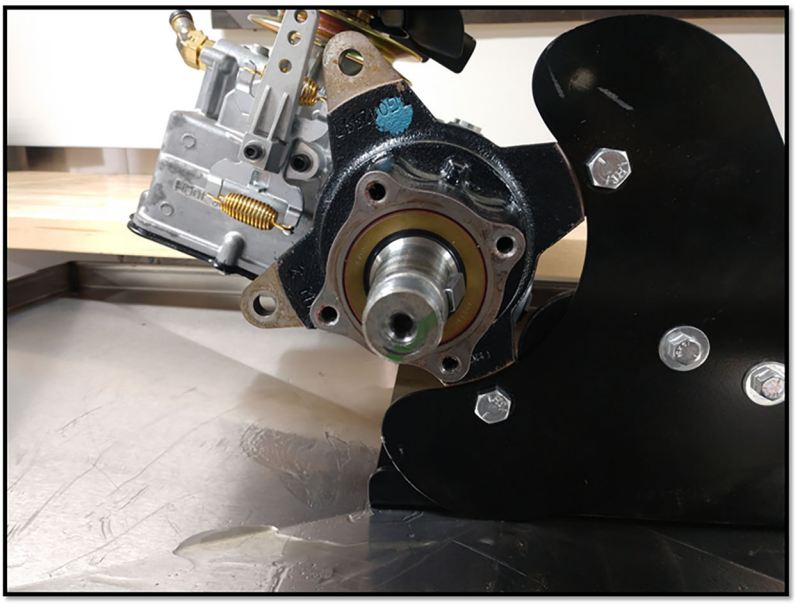

- Oil filter in the bottom rear of the transaxle case.

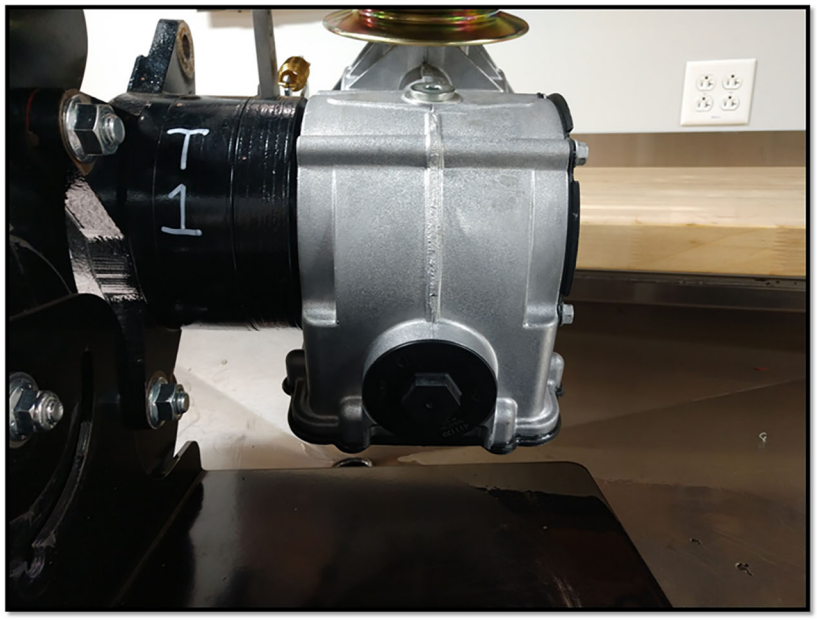


# Disassembly

- Remove the Fan nut with a 15/16 socket remove the fan and pulley nut.
- Inspect the nut for any thread or other damage. If none exists, the nut can be reused.

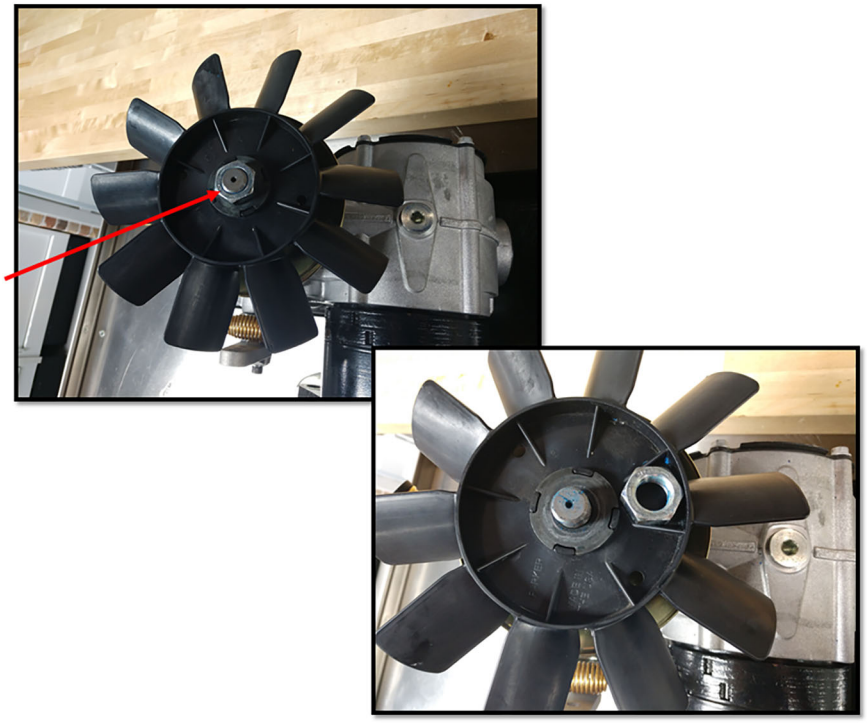

- Remove the four-tab washer.
- Remove the fan.
- Check for any damage due to normal wear. If none exists, the fan can be reused.

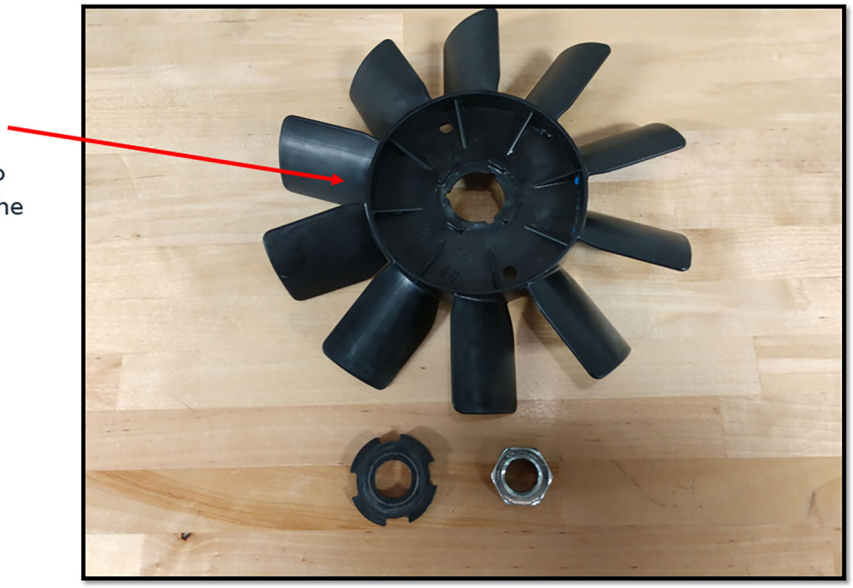

- Remove the pulley.
- Use caution not to bend or damage the pulley.
- May require using Posi Lock Model 204 puller or a bearing puller to take off the pulley.

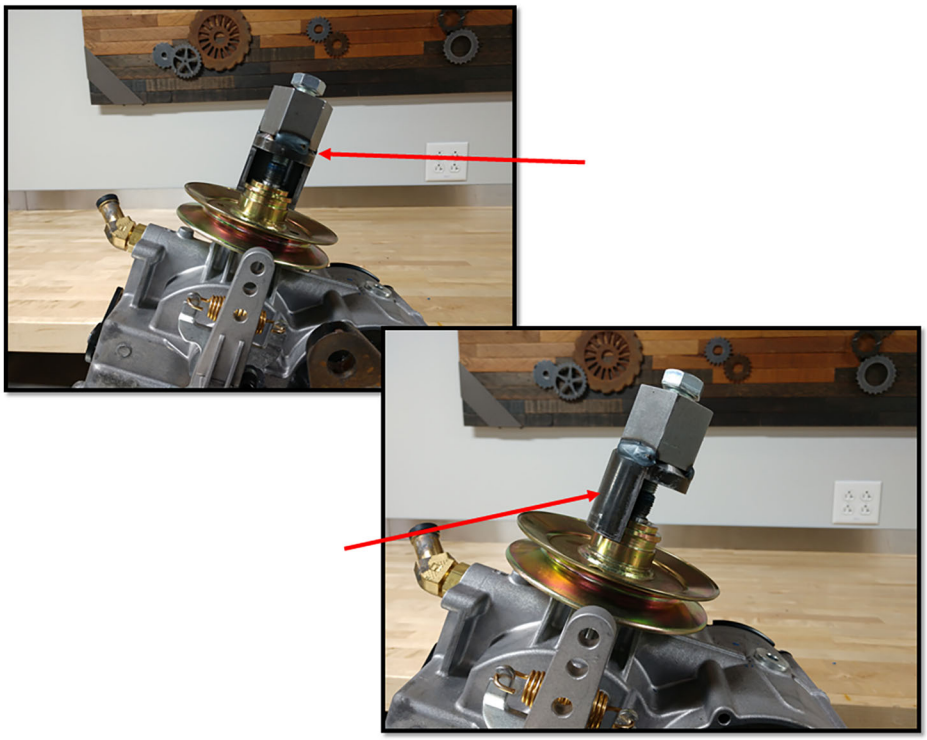

- Remove the pulley.
- Caution: use caution not to bend or damage the pulley.
- May require using Posi Lock Model 204 puller or a bearing puller to take off the pulley.

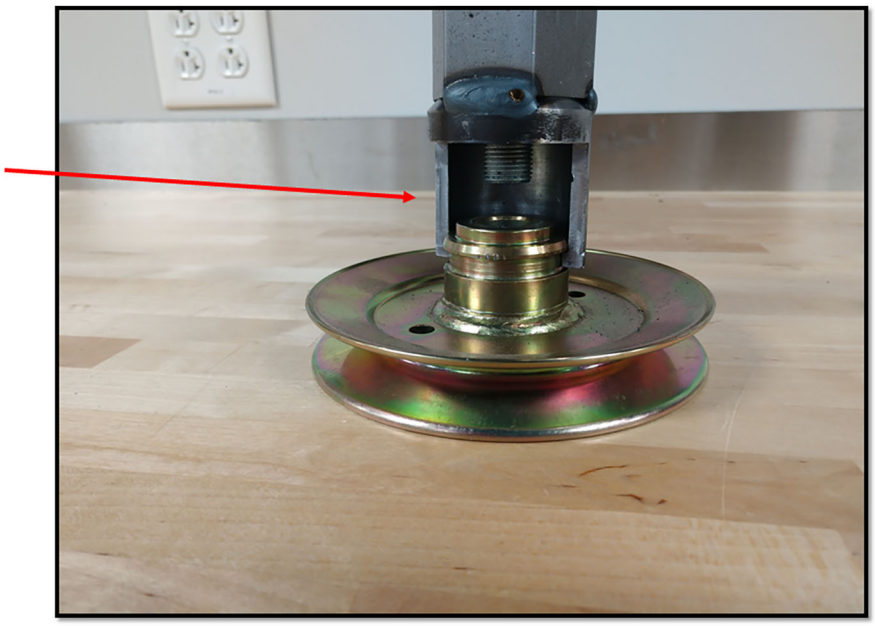

- Inspect the input shaft for damage.
- Check the threads on the shaft for pulled or missing threads from removing the fan nut.
- Check the shaft taper for damage from a spinning pulley and fan assembly.

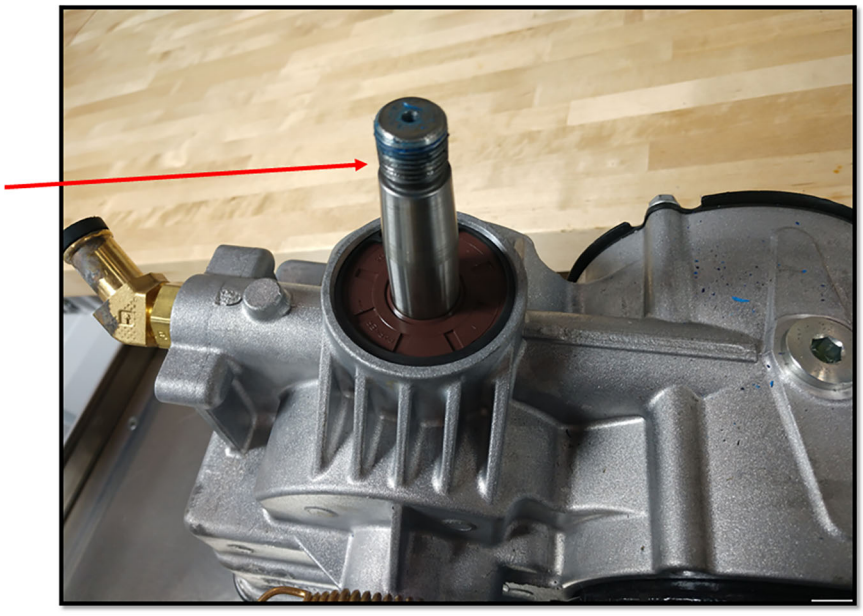

- Remove the return to neutral springs from the return to neutral assembly.

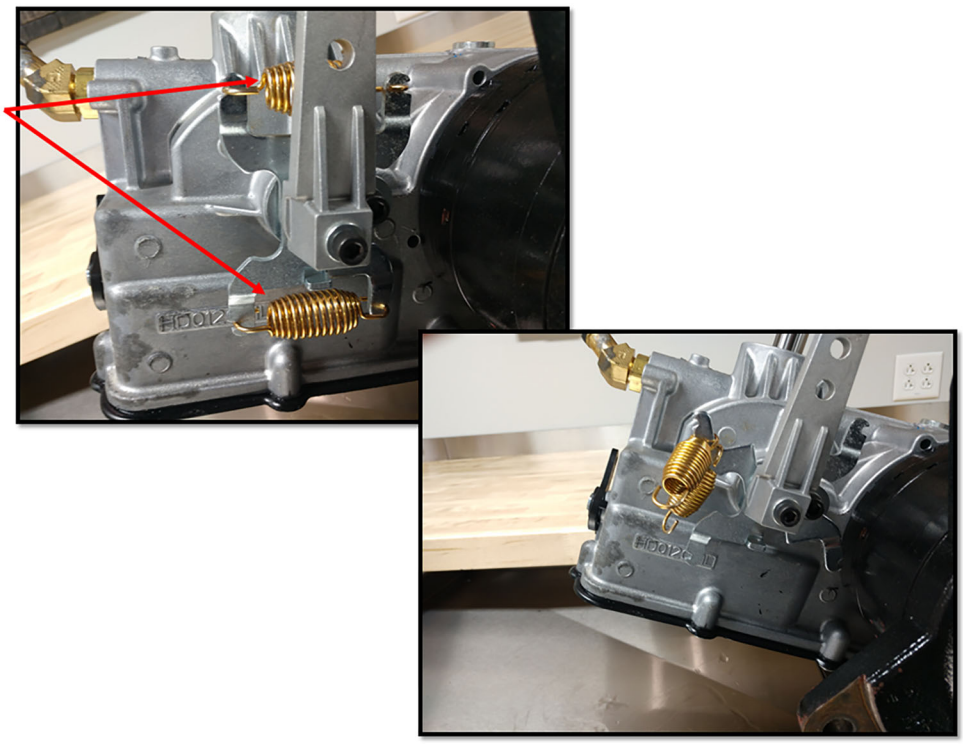

- Remove the directional control arm.
- Use a 3/16" Allen wrench to remove the Allen head screw.

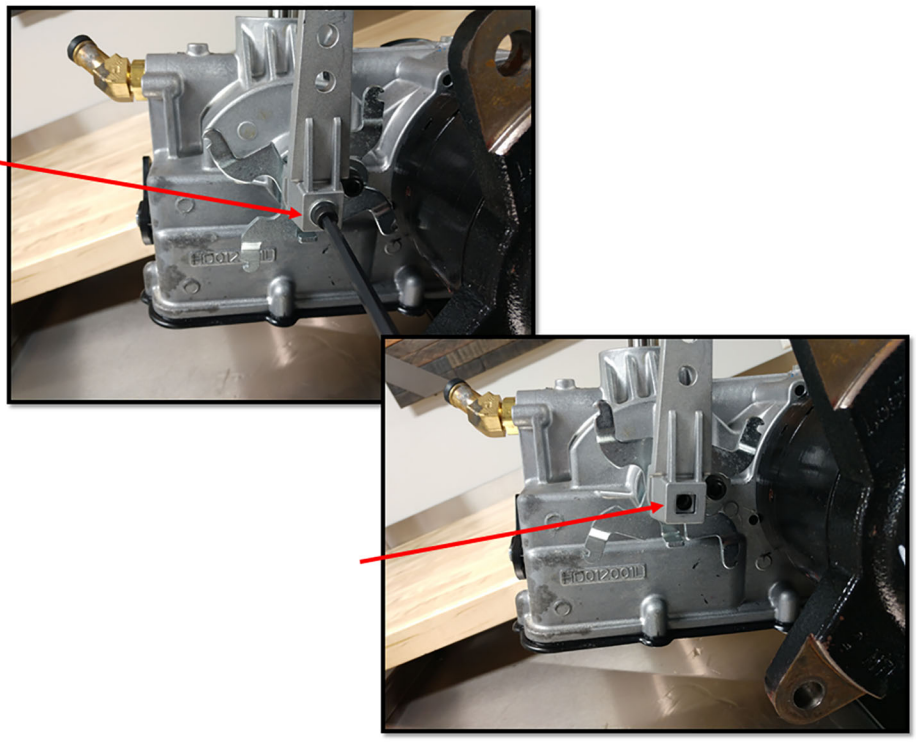

- Remove the return to neutral spring anchor arms.
- Note the location of the nylon washers for freedom of motion.

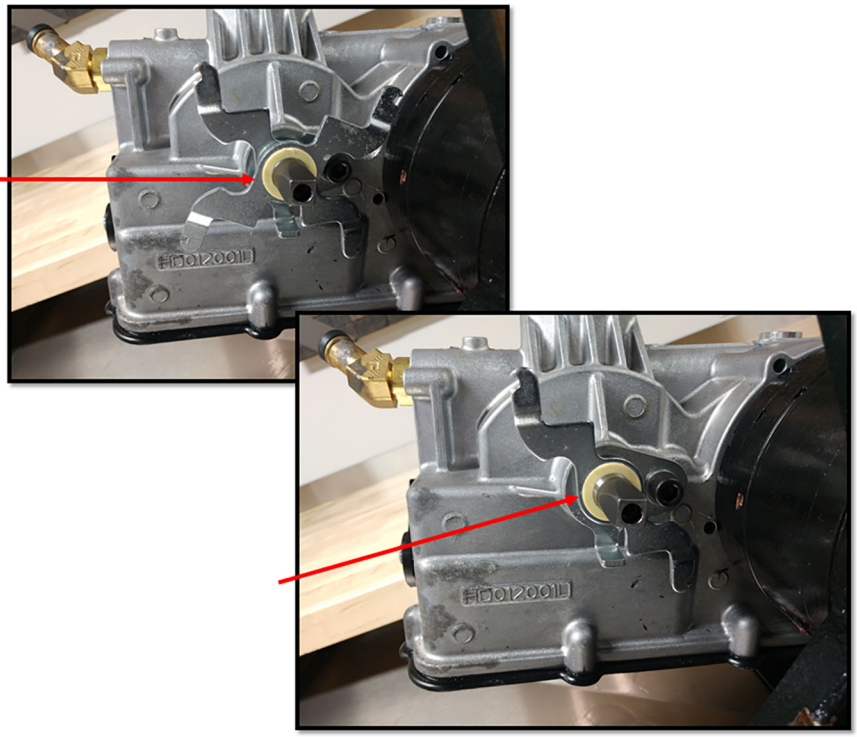

- Remove the hydraulic neutral stop from the case using a ¼" Allen wrench.
- Check the threads in the case for damage.

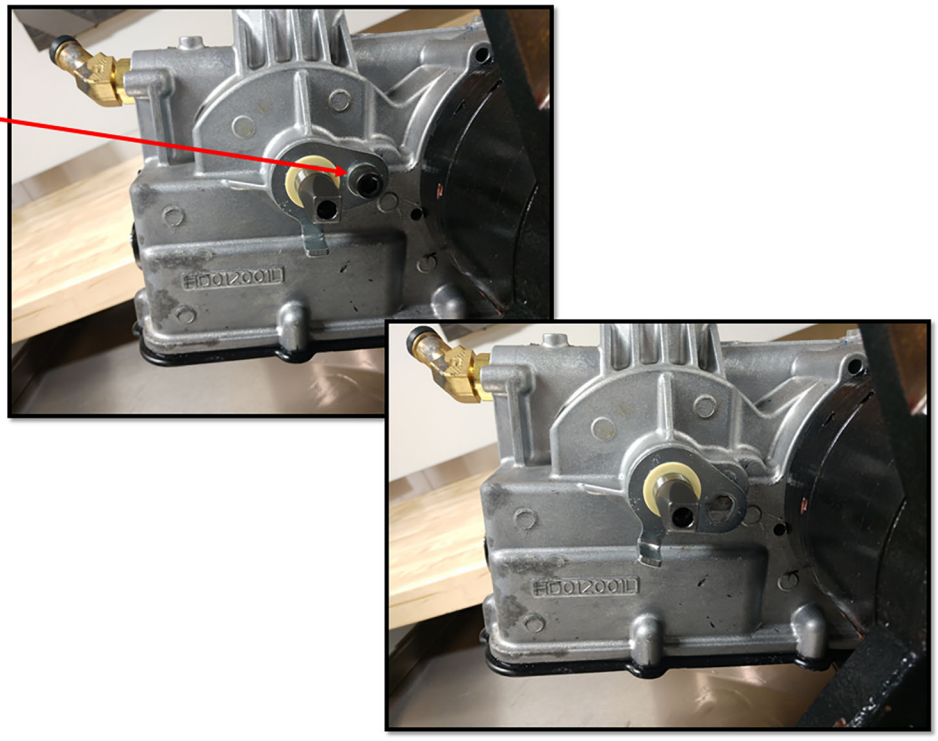

- Check the threads in the case for damage.
- Inspect the drive control linkage for damage and wear. Replace as needed.
- Note the location of the nylon washers for proper operation.

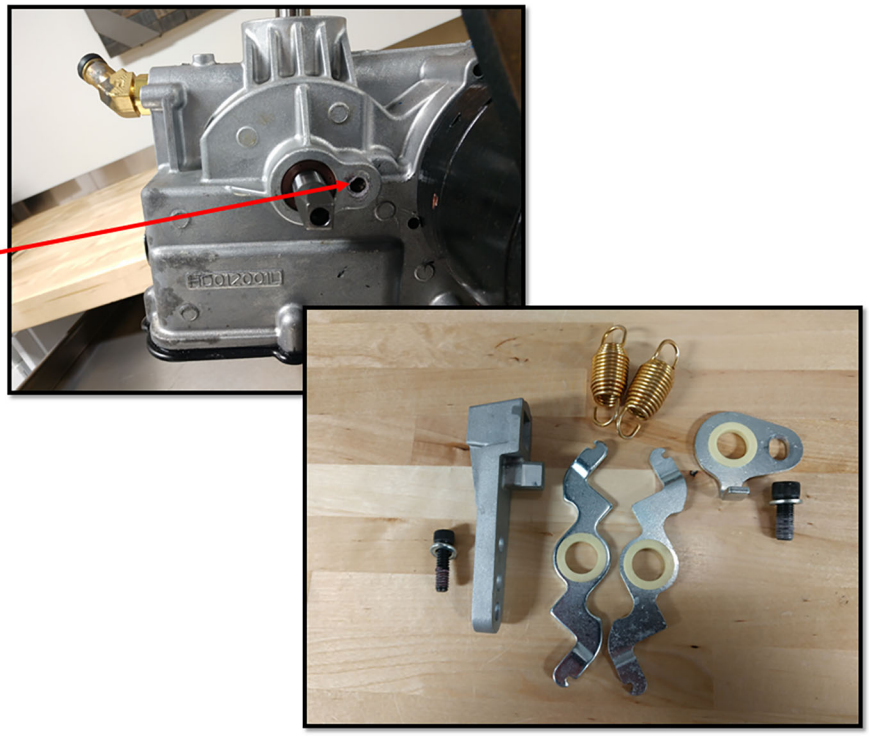

- Remove the fluid filter to completely drain the unit.
- Drain into a drain pan or into a teardown table collection tray.

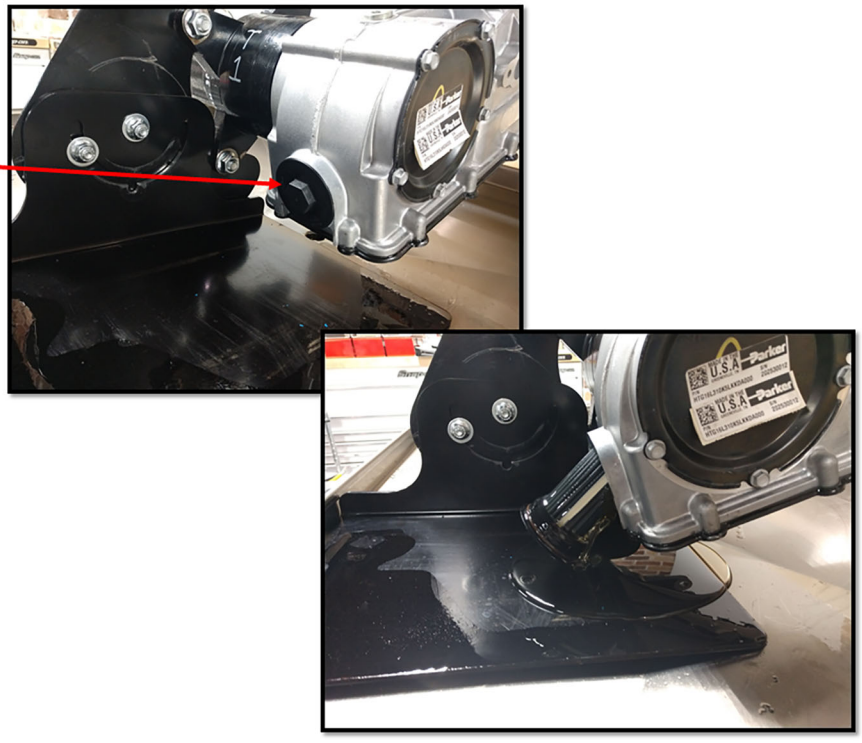

- Inspect the filter body for signs of damage inside the hydro drive system.
- Check for metallic chips in the oil and in the oil coming out of the unit.

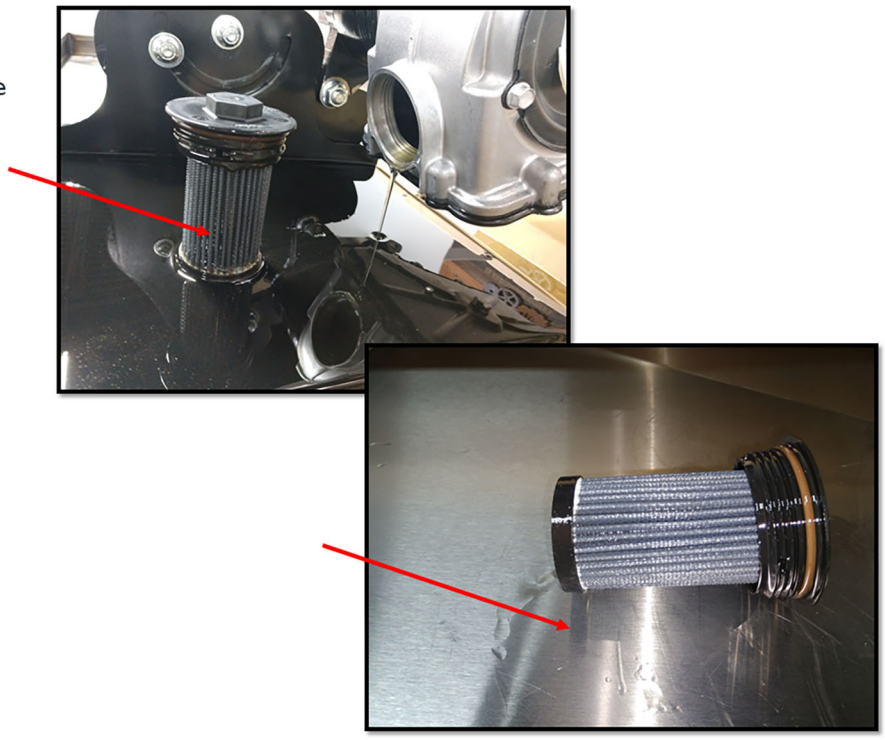

- Inspect the charge pump pick up tube.
- This is the tube that the oil filter would be slid on so the oil going into the system would be filtered.

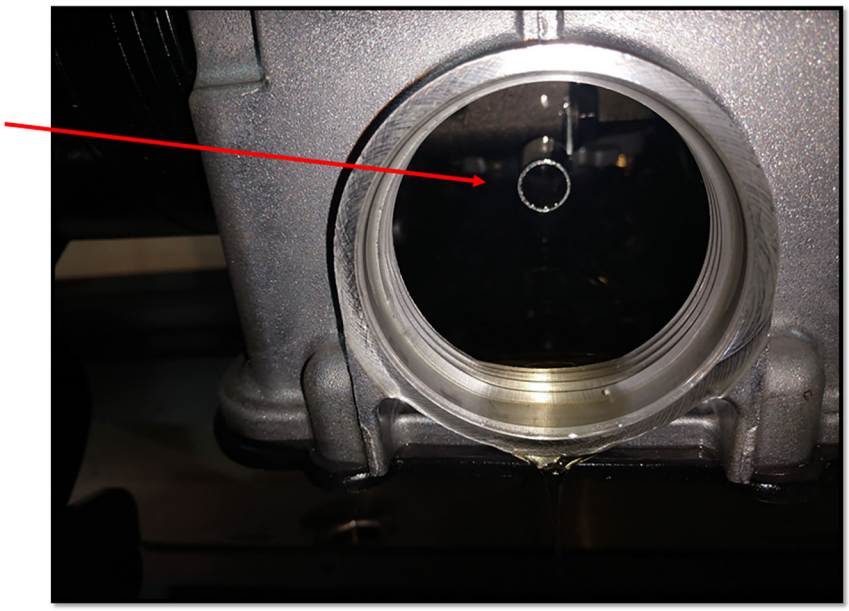

- If additional disassembly will be done, please mark the wheel motor assembly to the pump case for ease of assembly when the unit is put back together.

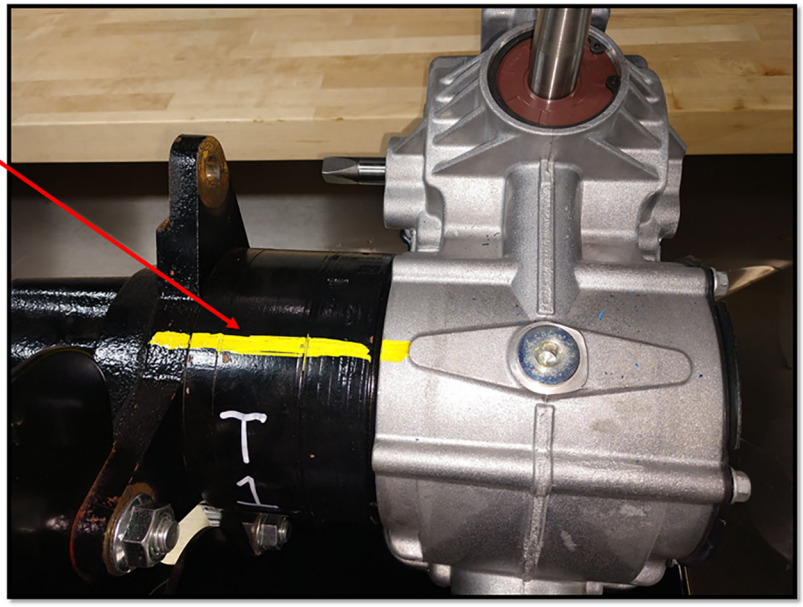

- Remove the side cover.
- Remove the five screws from the side plate and remove the plate.
- The model and serial number of the transaxle is on the paper decal glued to the plate.

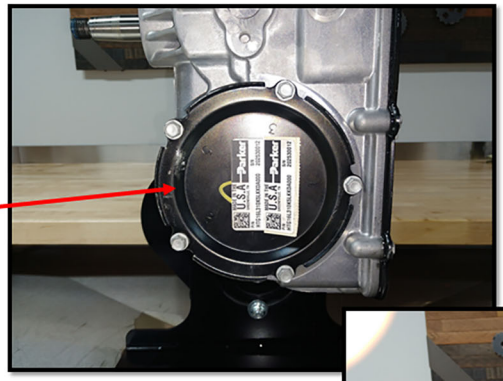

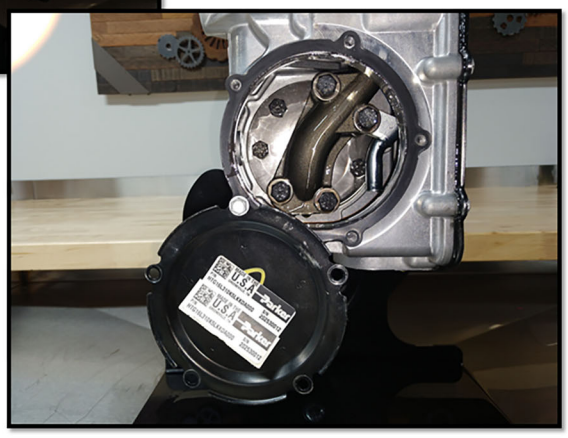

- If a leak was detected, please check the plate for damage and flatness.
- Check the case for damage.

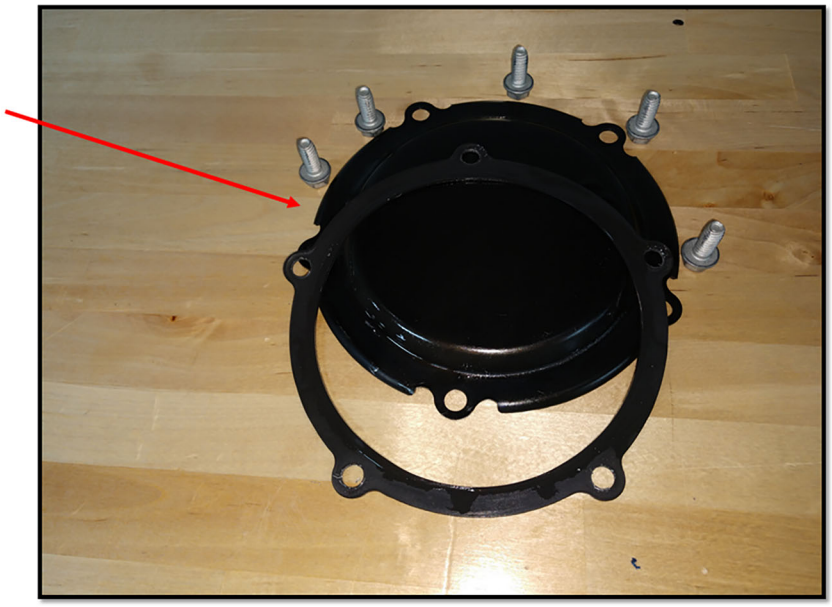

- Remove the bottom cover.
- Remove the 10 ¼ - 20 screws from the bottom cover.
- Inspect the cover and gasket if a leak was coming from this cover.
- Once the gasket is removed check the case for any damage.

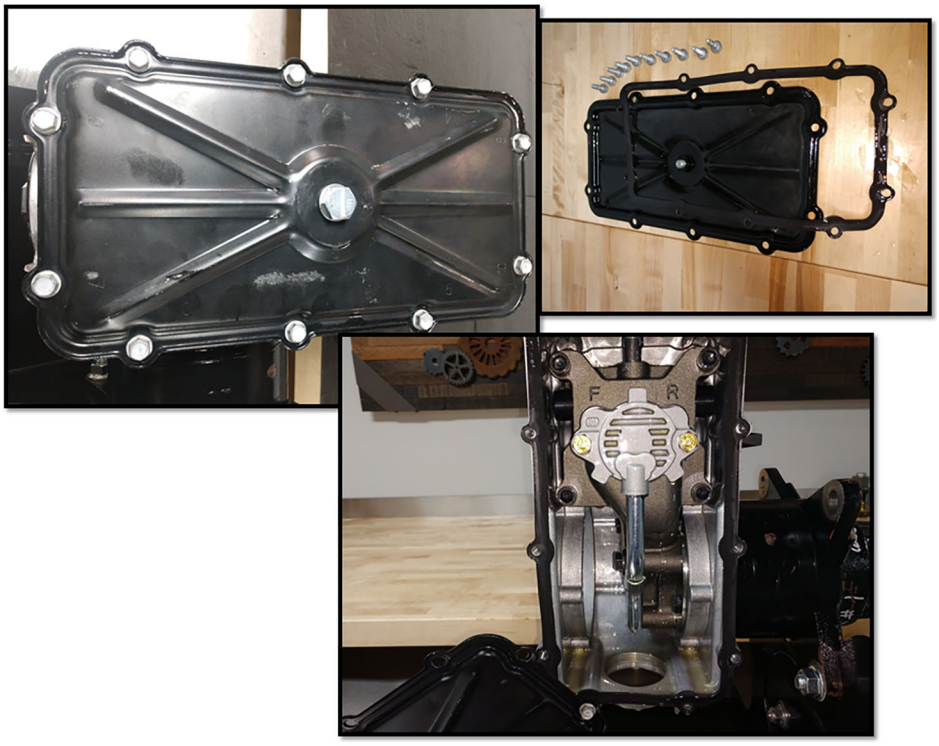

- Remove the two charge pump cover bolts.

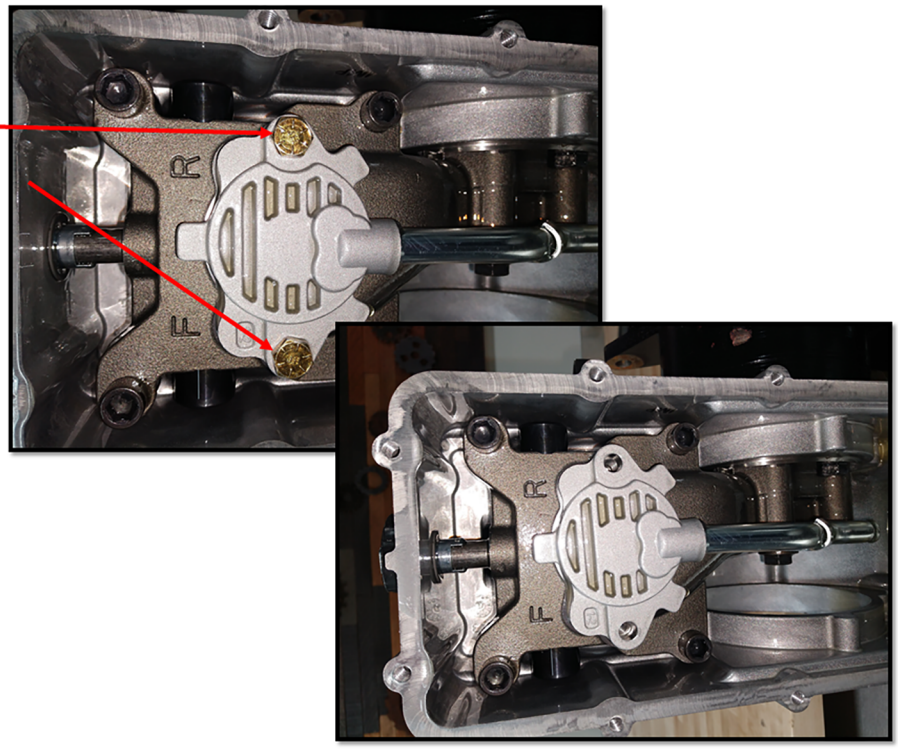


- Remove the charge pump cover.
- Remove and inspect the inside of the charge pump cover for any scoring, replace if necessary.

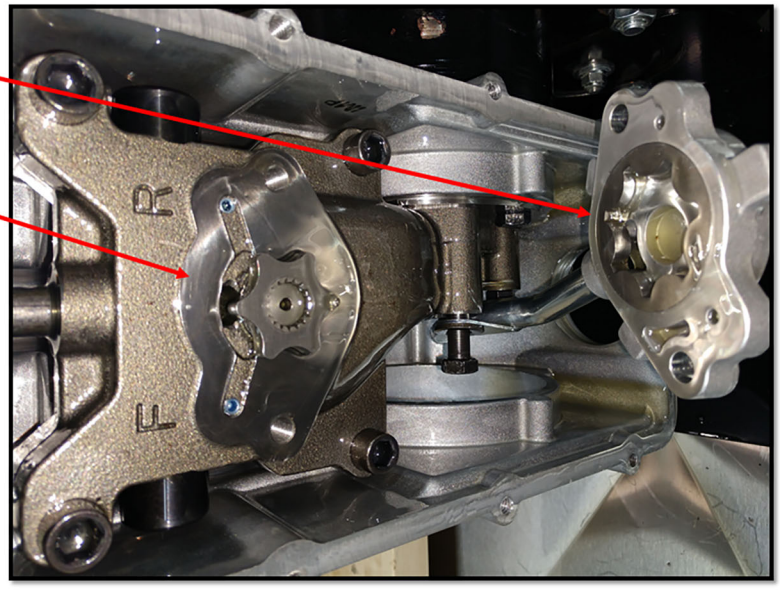

- Remove the one cap screw holding the charge pump tube to the pump body.

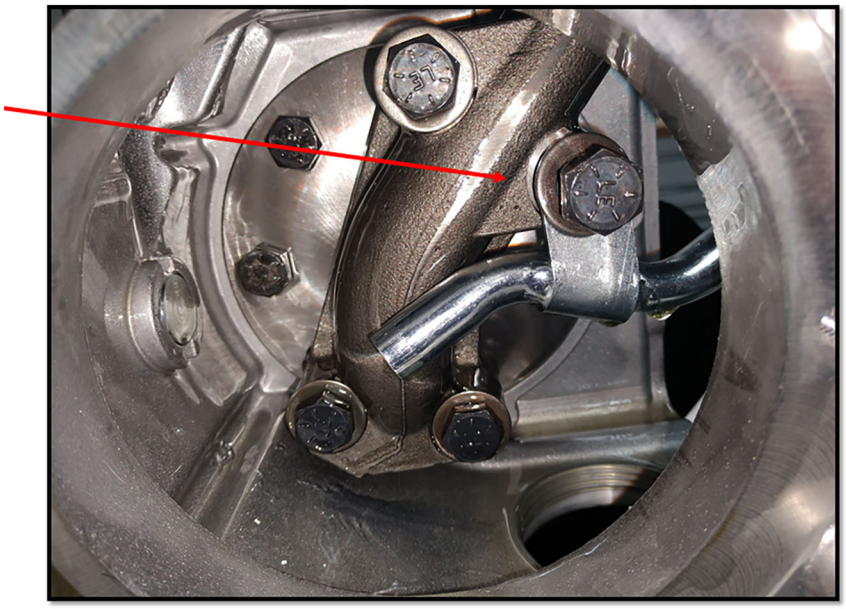

- Remove and inspect the inside of the charge pump cover for any scoring.
- Remove both the charge pump rotor and stator.
- Inspect for any damage on either on the tips of the rotor or stator lobes. Replace if necessary.

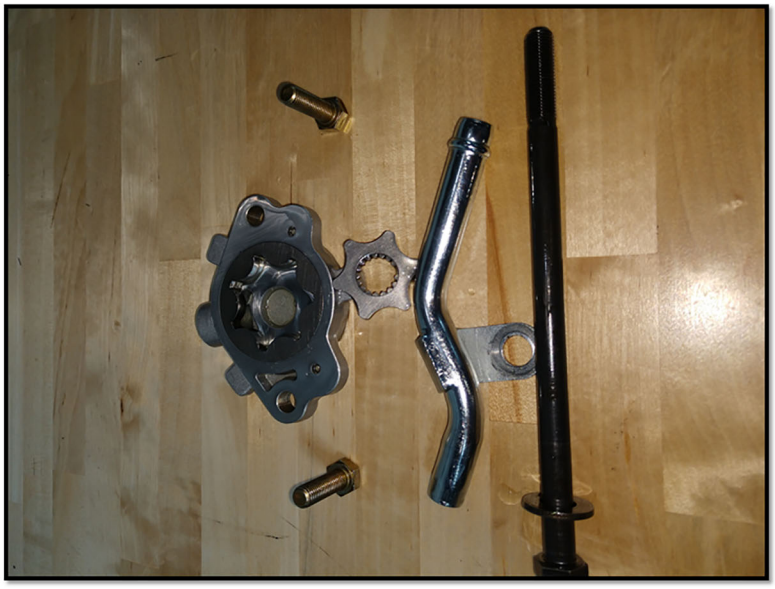

- Check the pump face on the end block.
- If there is damage here, there will be damage on the pump lobes.

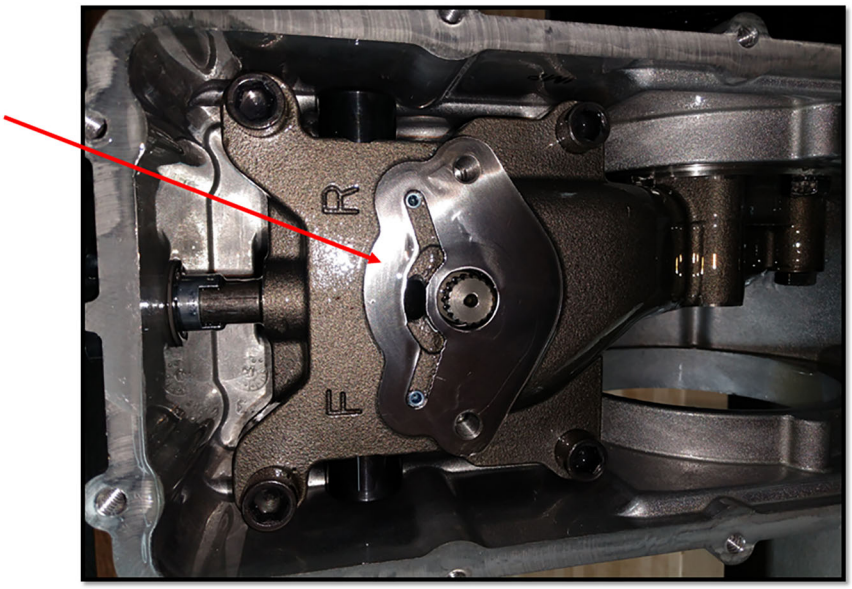

- Bypass lever removal.
- Note the location of the lever on the outside of the transmission case.
- Remove bypass valve clip.
- Using a flat head screwdriver push the clip upward to release.

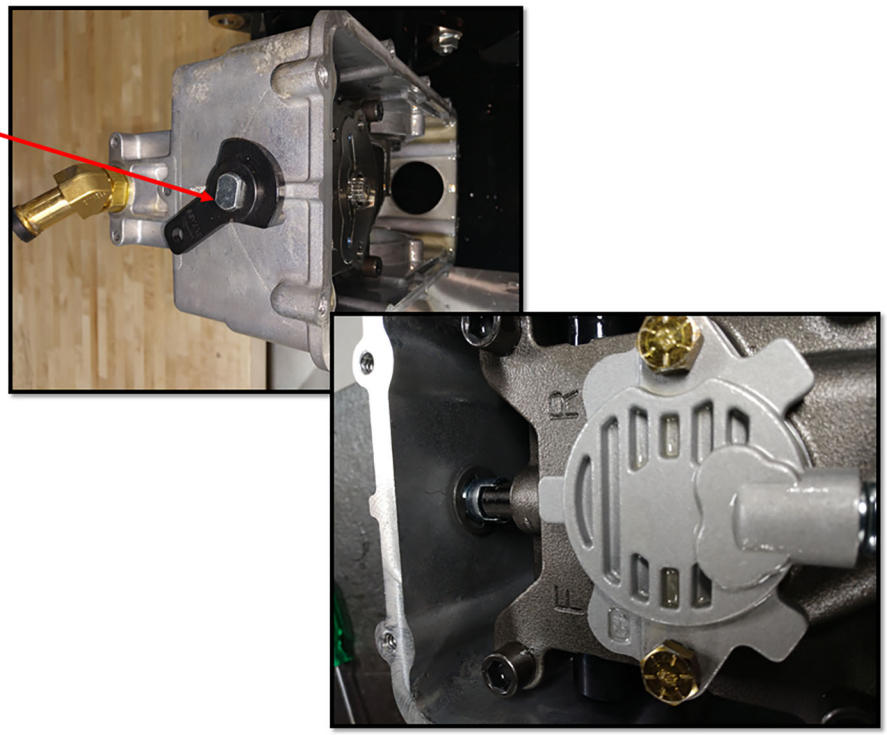

- Remove bypass lever out of transmission case after removal of the retaining clip.
- Check O-ring for damage and note the lever location on the case.

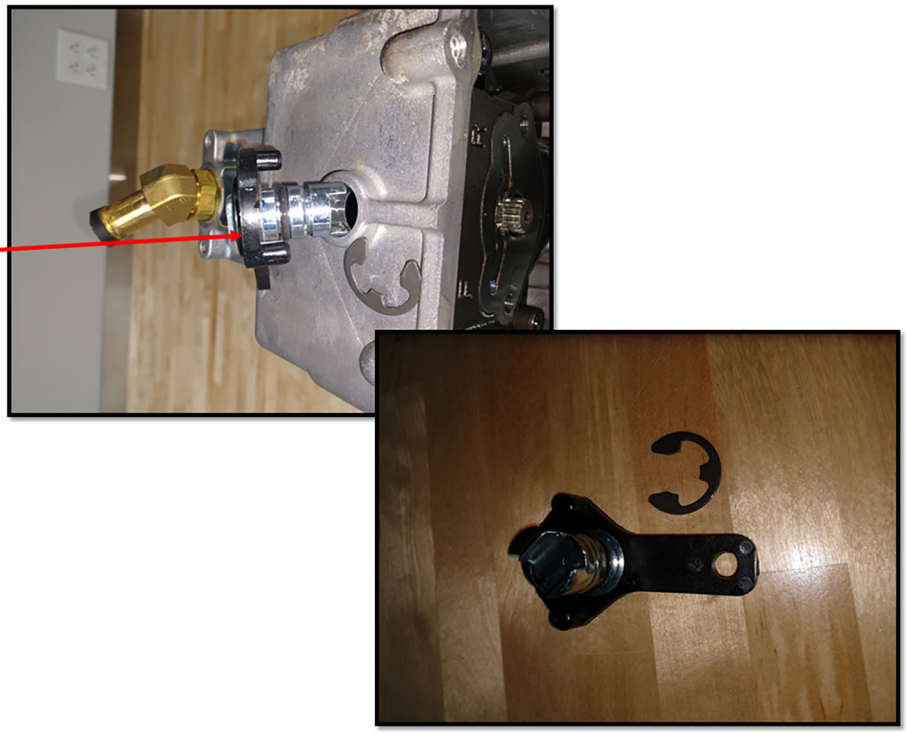

- Loosen and remove the 4 cap screws holding the manifold to the wheel motor.

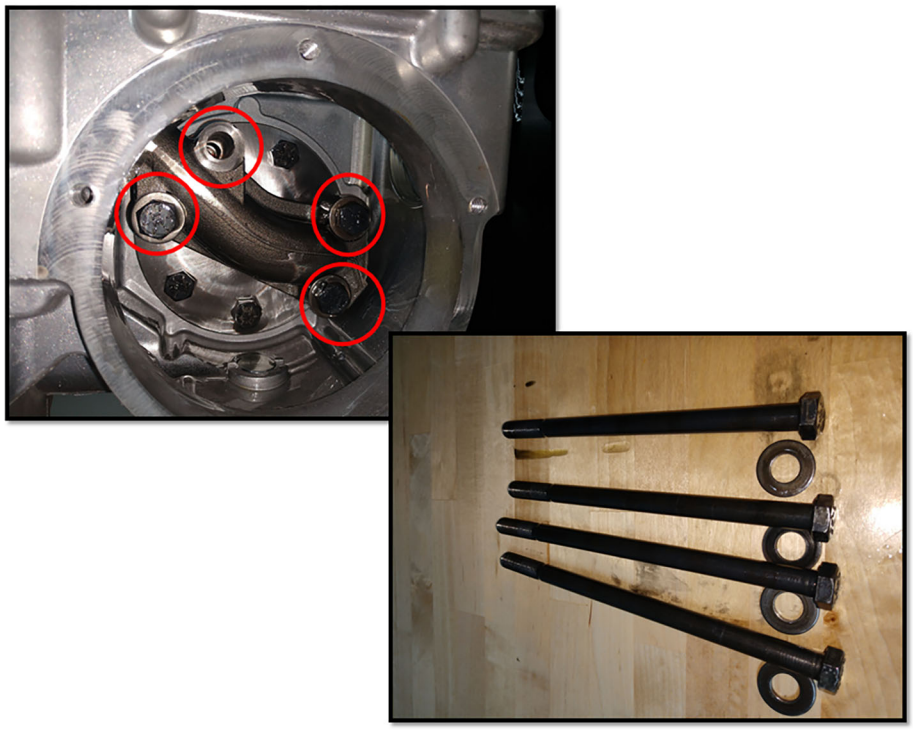

- Remove four end block Allen head screws.
- Note that two of the four screws are longer than the other.
- Inspect the threads on each bolt.

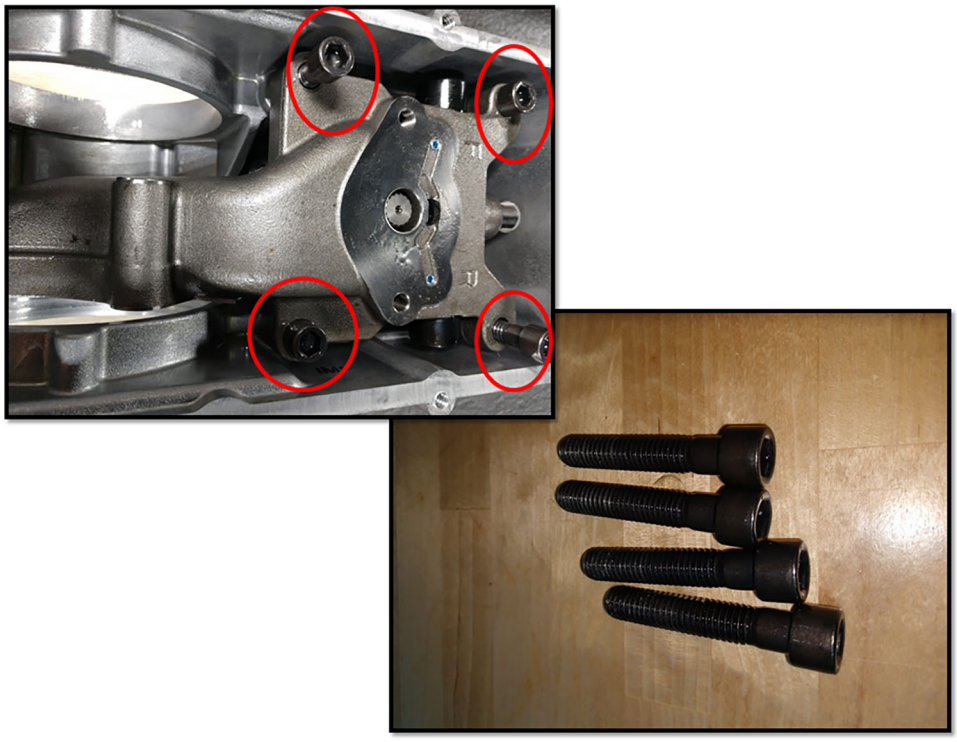

- Remove the end block.
- Caution: taking out the end block may require holding down on the barrel to separate it from the port plate.

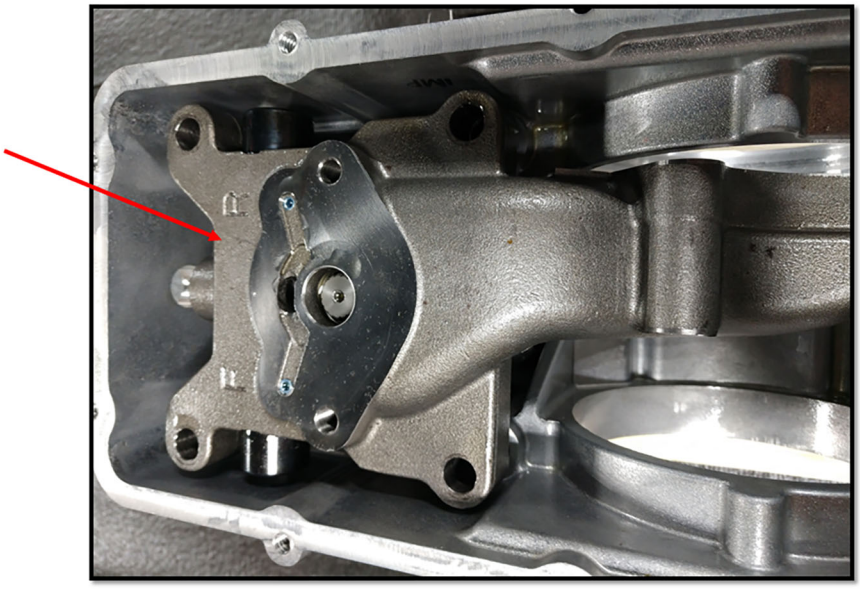

- Remove the rotating group with pistons.
- Note the wear plate under the rotating group.
- Remove the port plate and inspect.
- Note brass side of port plate faces rotating group.

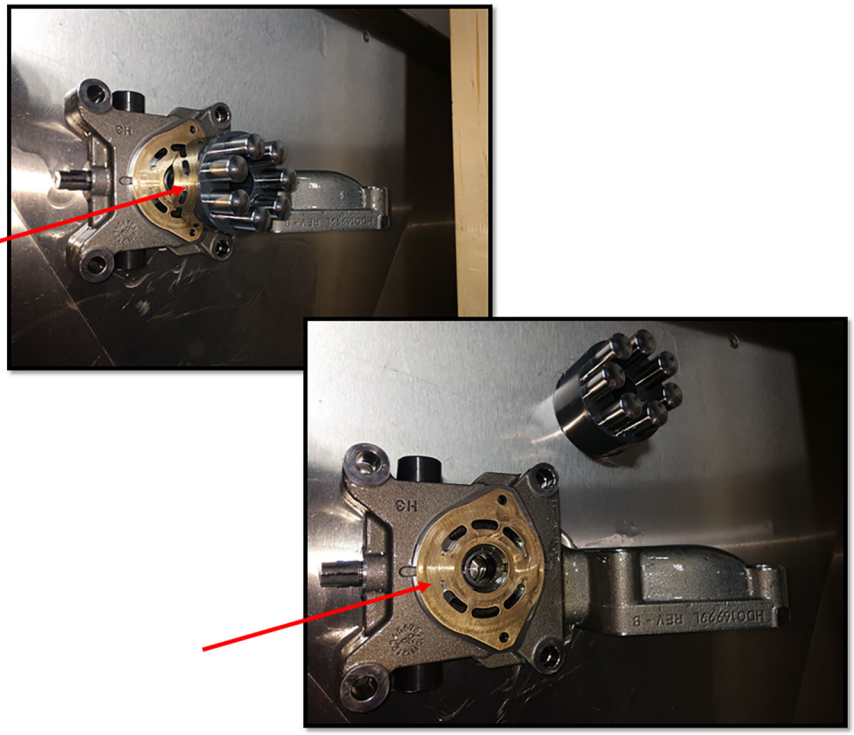

- Remove the central spring from the input shaft.

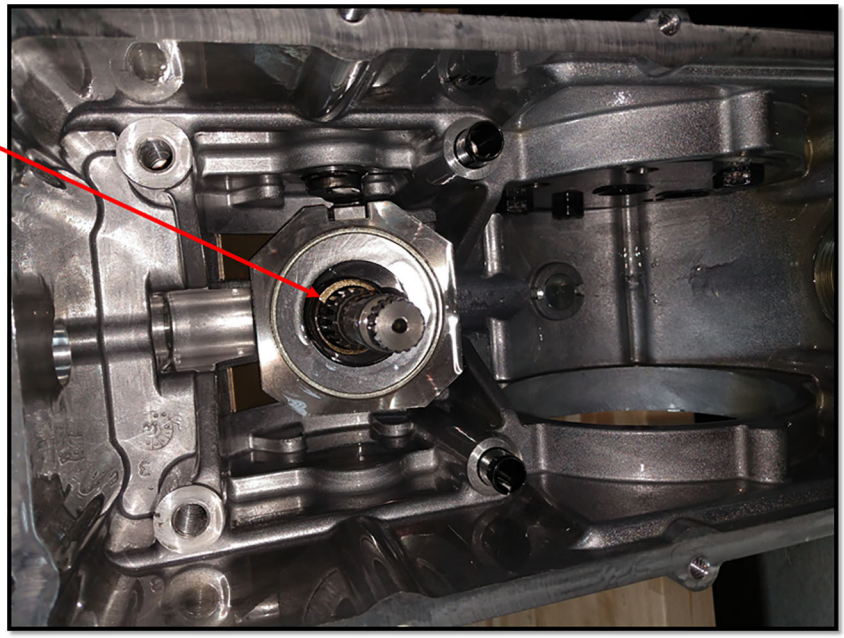

- Remove the swash block.
- Inspect the top and bottom surfaces for excessive wear.
- Remove the square control block.

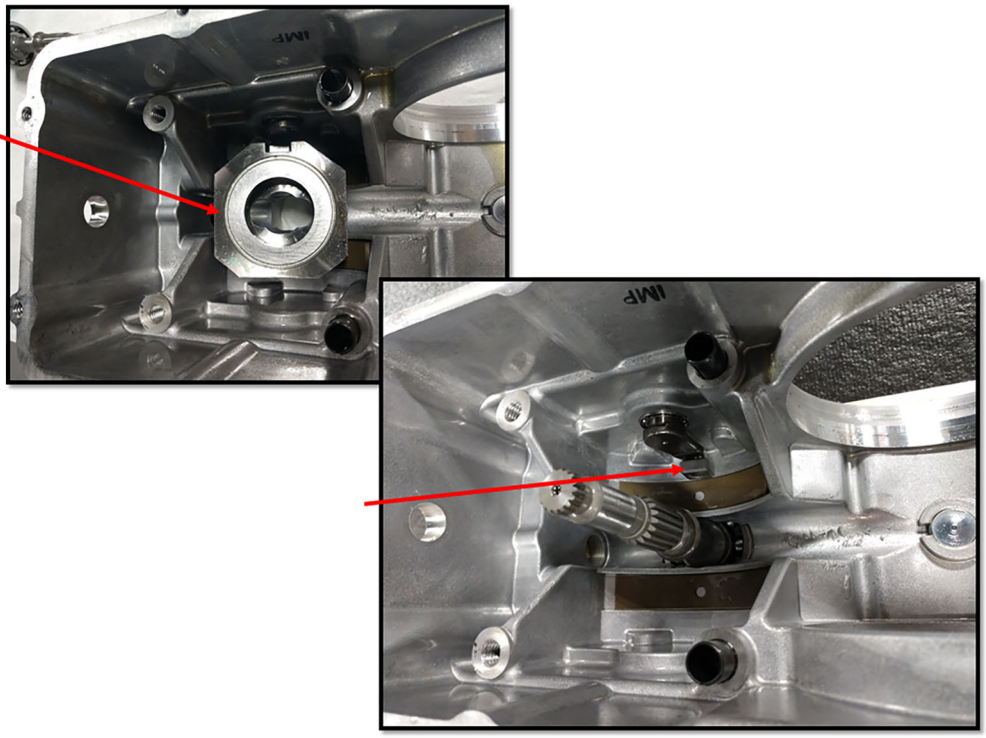

- Remove both cradle bushings and inspect for excessive wear, pitting or scoring.
- A light visual wear of the coating is allowed.

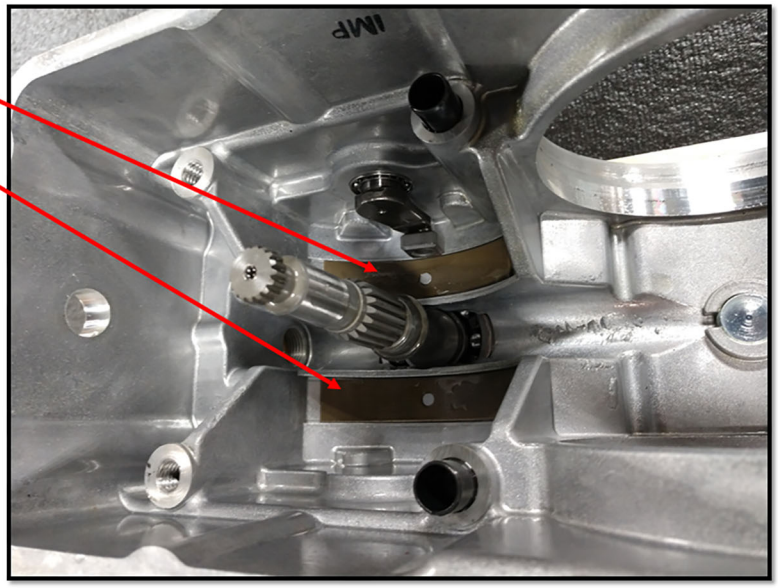

- Remove the input shaft seal snap ring with an internal snap ring pliers.
- Remove pump shaft and bearing assembly.
- Tap the top of the shaft with a rubber mallet to loosen and remove from the housing.

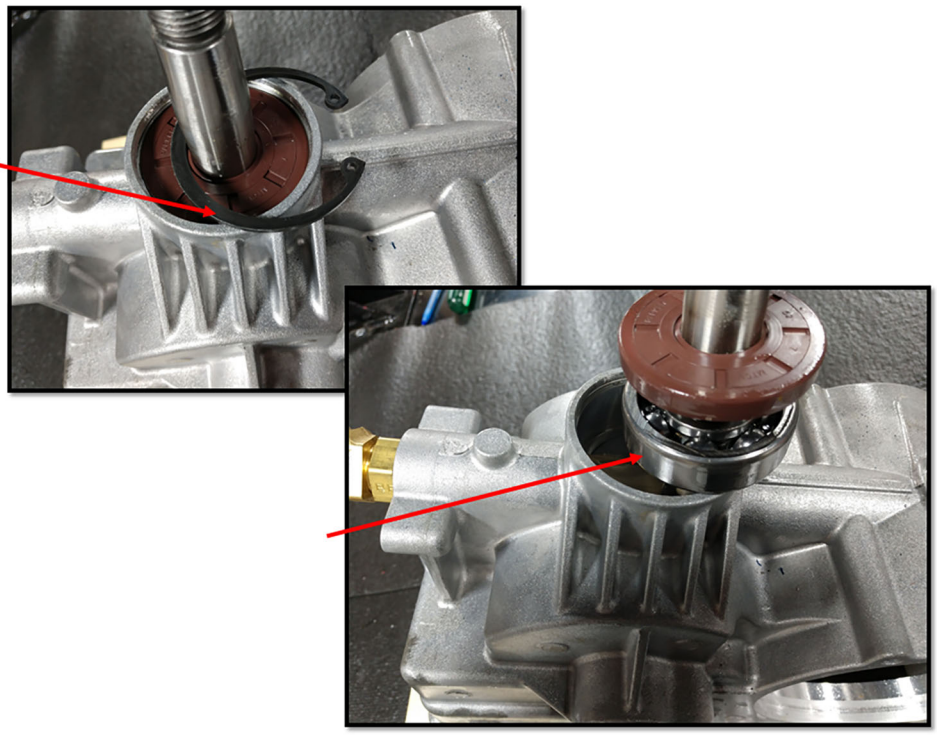

- Remove the bypass shaft from the end of the housing and check for wear or damage.
- Remove valve cap from the end of the block.
- Remove the spring and shock valve.
- Note: Keep the shock valve in the same port it was removed from.

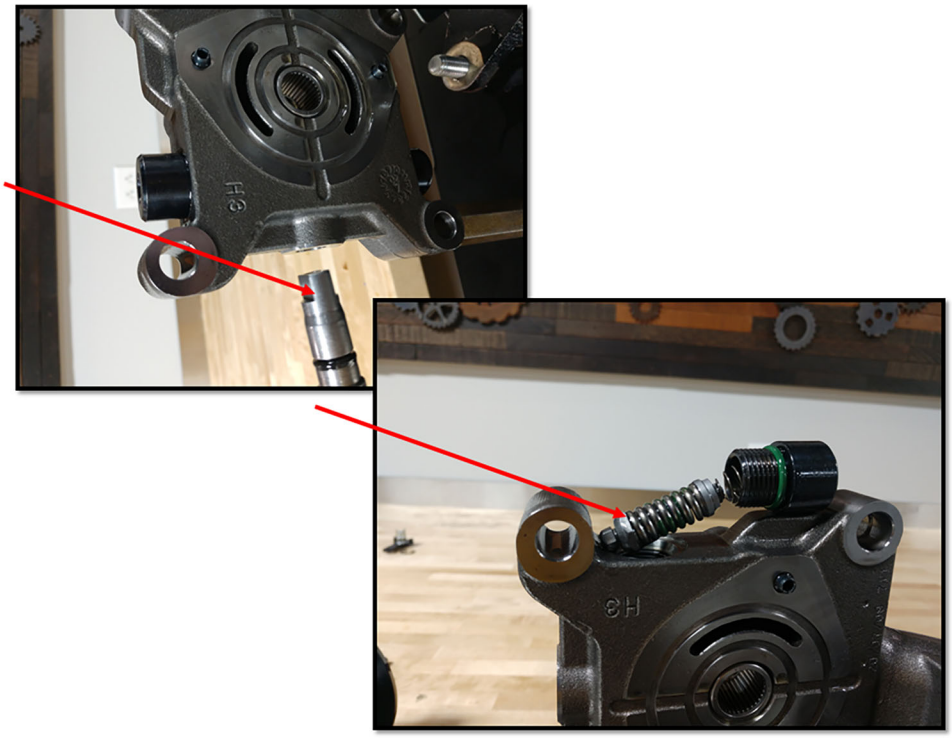

- Remove trunnion arm and square control block from transmission case.
- Inspect for wear or damage.
- Remove top washer (.250" thick) and thrust bearing and inspect for wear and or damage.

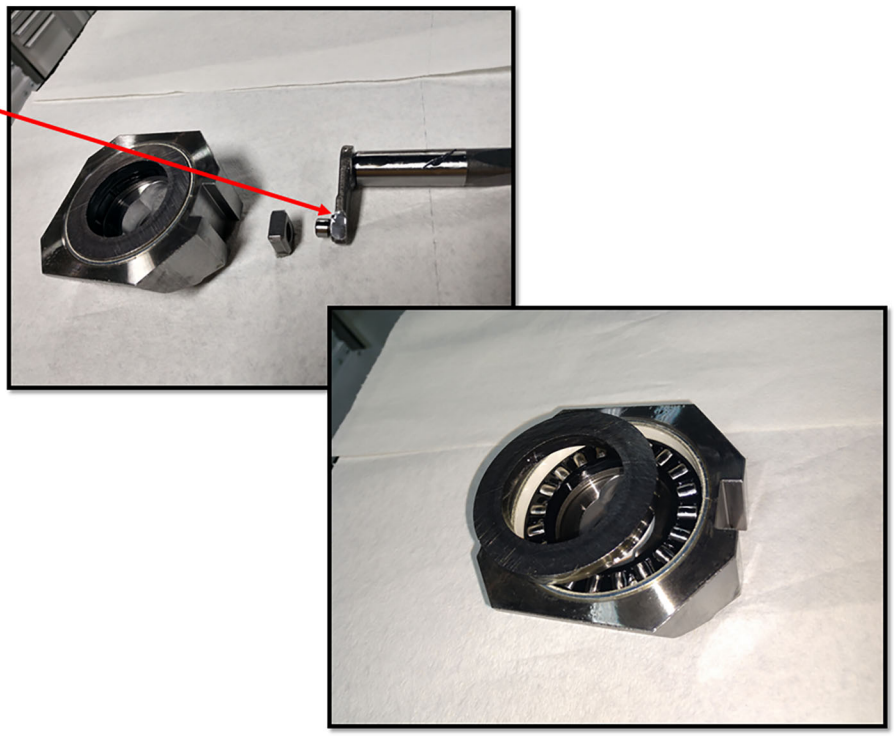

# Motor Disassembly

- Make sure the wheel motor is marked before disassembly.
- Remove the last three cap screws holding the wafers together.
- Note: the length of the cap screws.

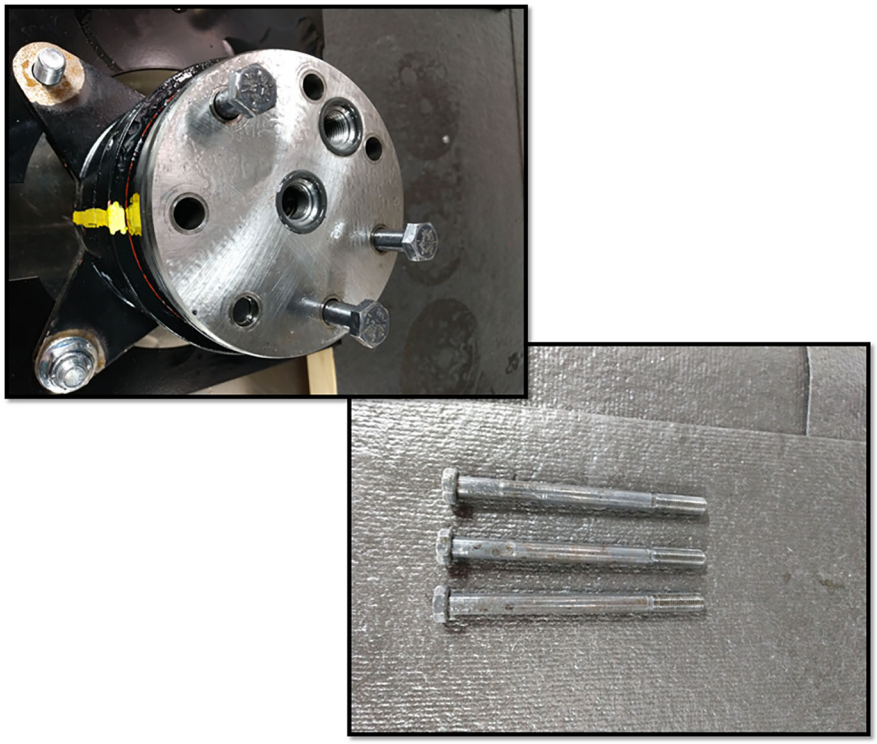

- Remove the top plate with the oil ports and O-rings.
- Set aside with the top up.
- Note: the O-ring seal around the bottom side which will seal against the next layer.

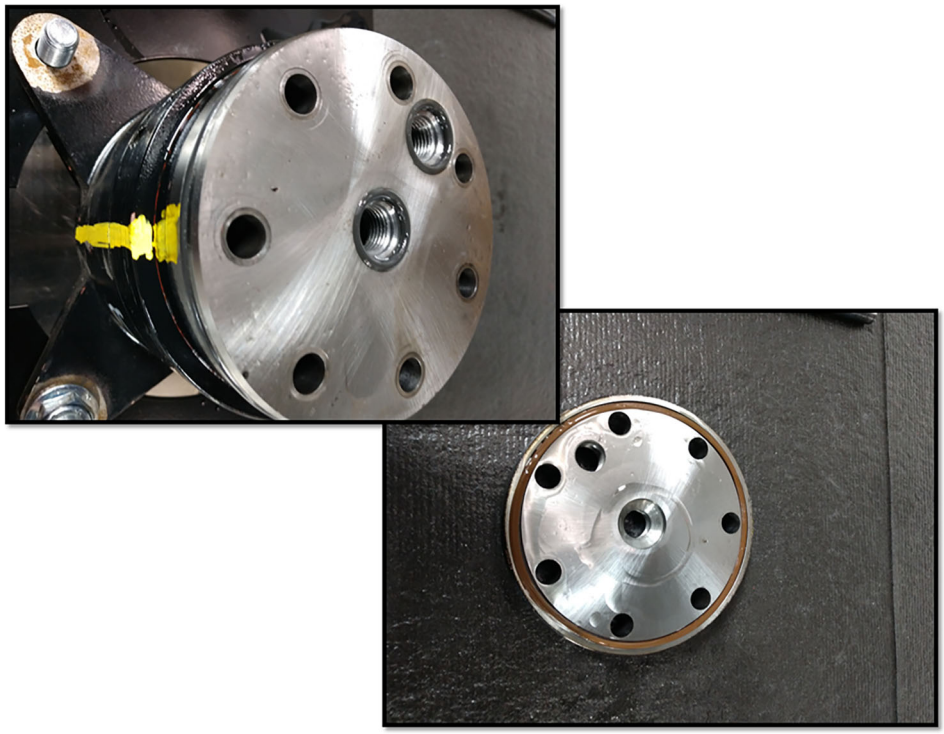

- Remove the commutator on the drive link and the commutator ring .

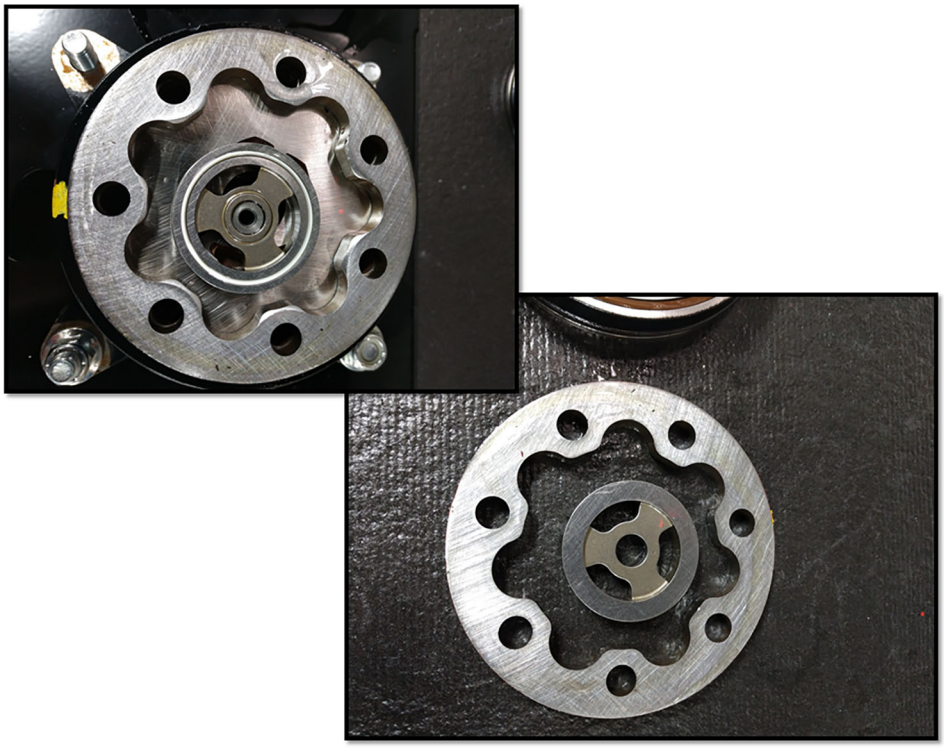

- Remove the manifold assembly.
- Note: the locations of the seals.

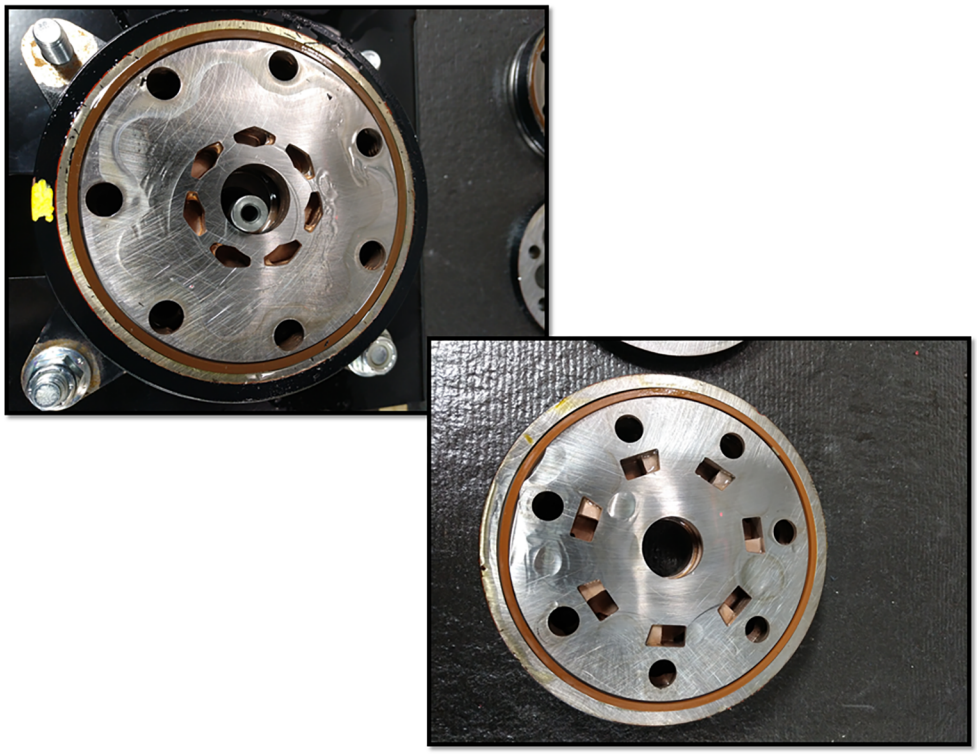

- Remove the rotor thrust washer.
- Remove the assembled rotor set.
- Note: the tight fit of the vanes around the center drive rotor.

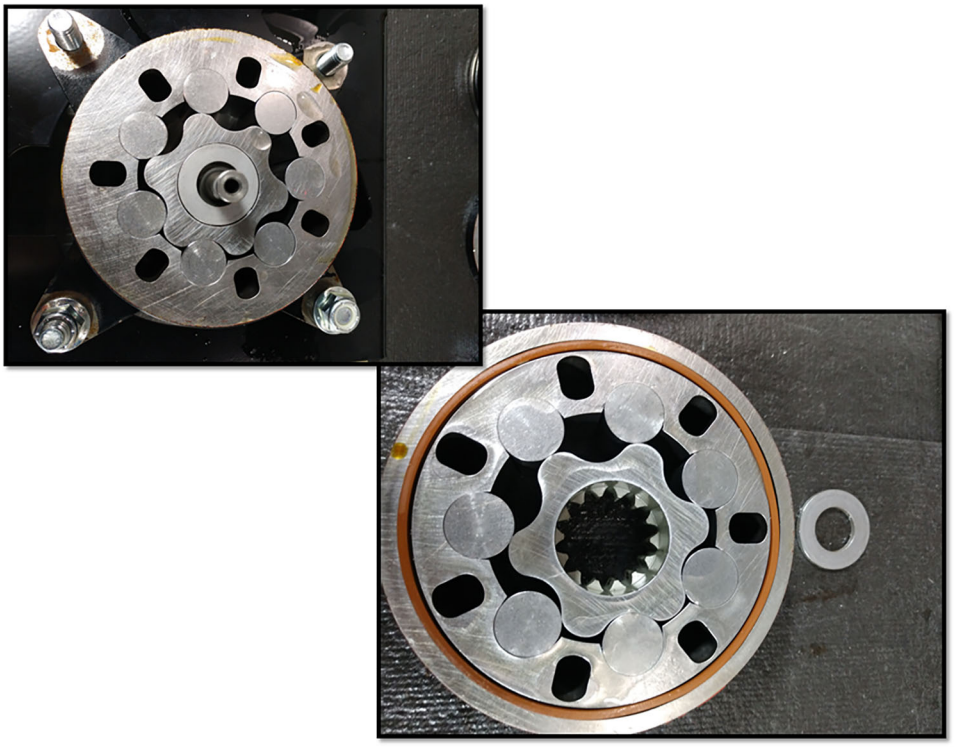

- When disassembling this section make sure not to damage the vanes and drive link.

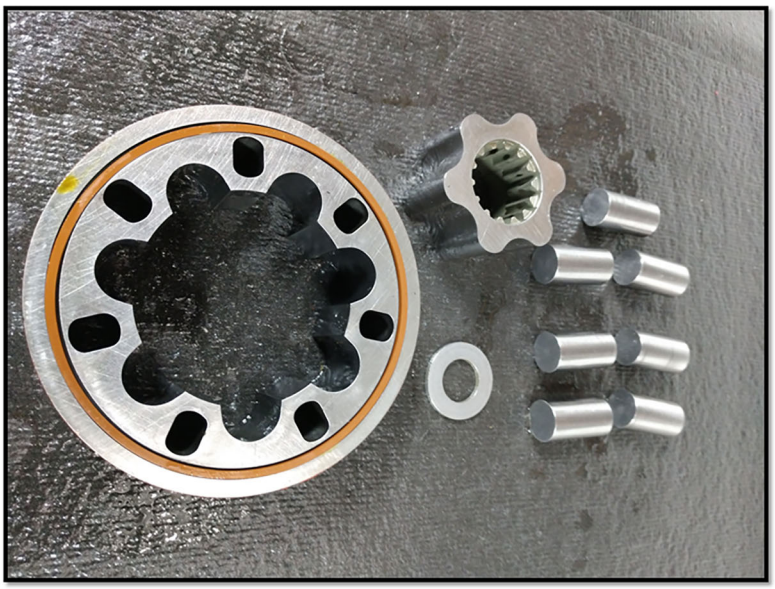

- Remove the lower wear plate from the wheel motor assembly.
- Inspect the lower wear plate for damage and wear.
- Note there is no grove for a seal.



- Inspect the drive link in the axle.
- Check for fit and smooth pivot on the lower splines.
- Inspect the drive link for any damage or wear.

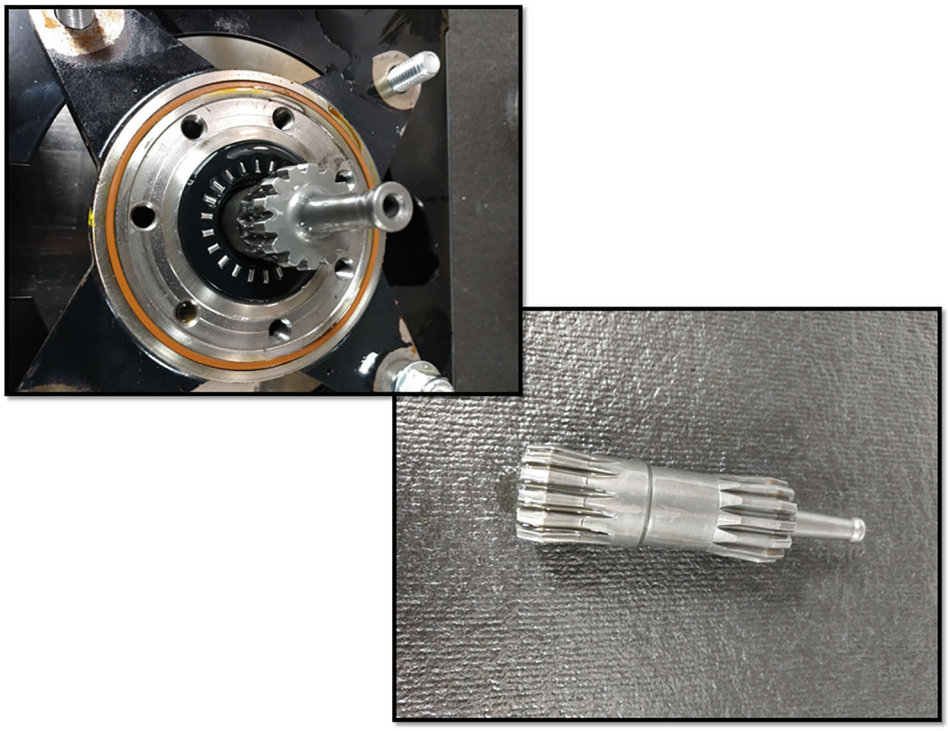

- Remove the thrust bearing from the axle case.
- Check the thrust bearing for wear of damage.

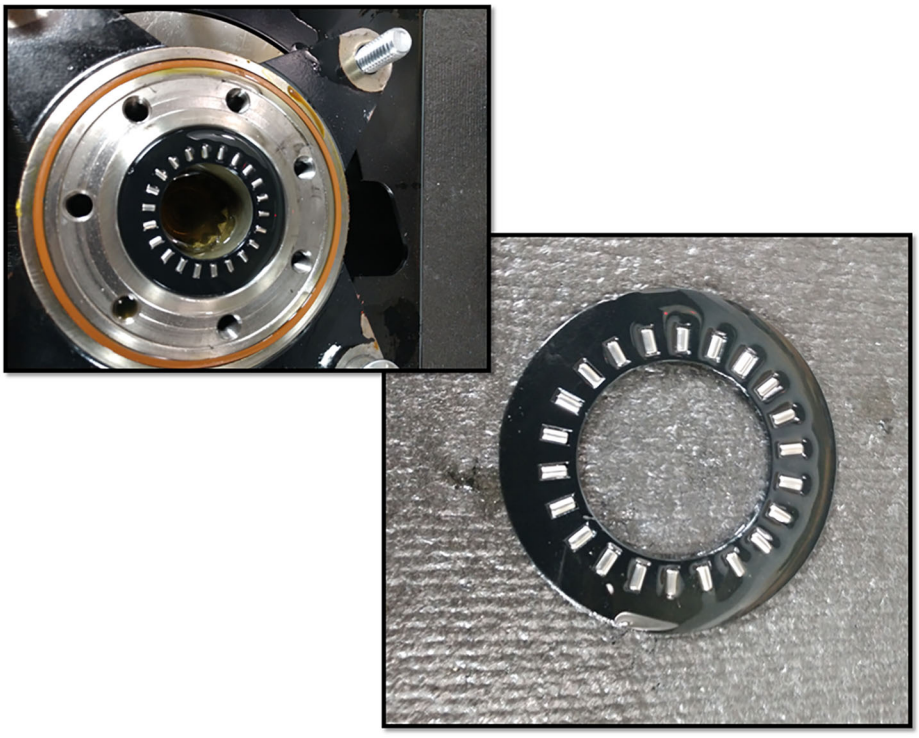

- With the thrust bearing removed, pop the axle shaft up and out of the housing.
- Remove the axle shaft from the housing.
- Check for wear and damage to the bearing surfaces.

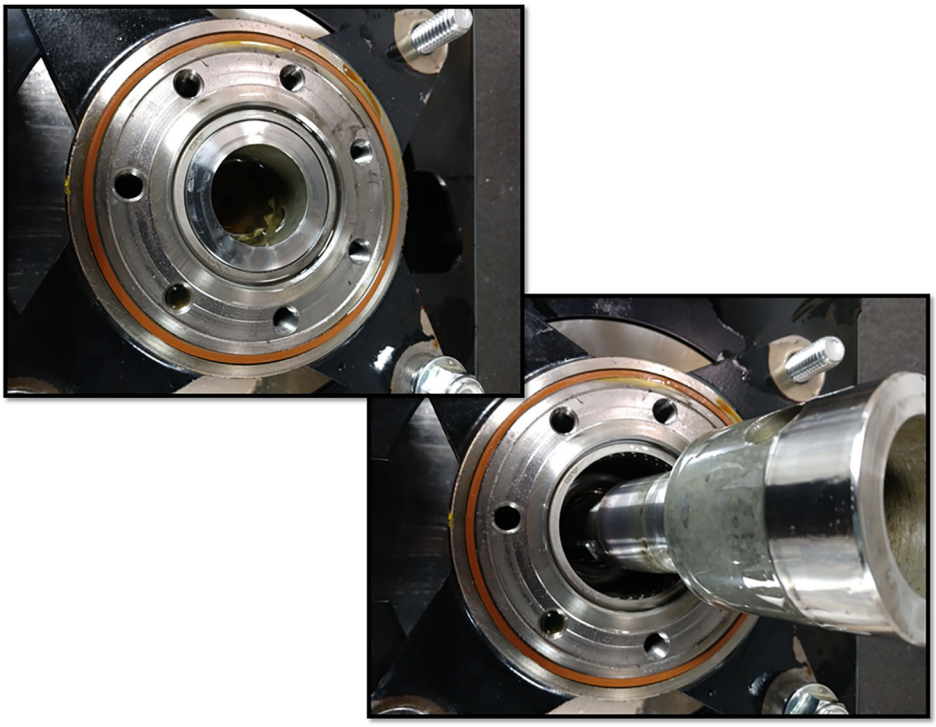

- With the axle shaft removed check for wear and damage to the bearings in the housing.
- Check all running surfaces for wear and or damage on the shaft.

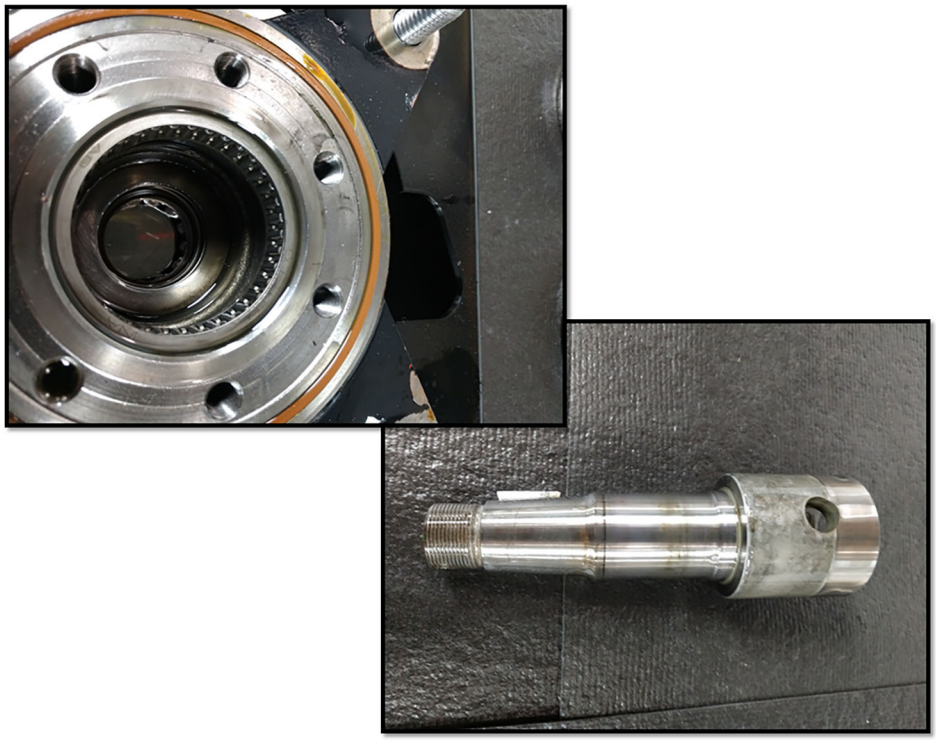

# HTG Transmission Assembly

## Pro-Turn 600



# Parker Transaxle Assembly

- Install the two cradle bushings.
- Place each cradle bushing onto the bushing pins in the housing. Do not stake the pins.

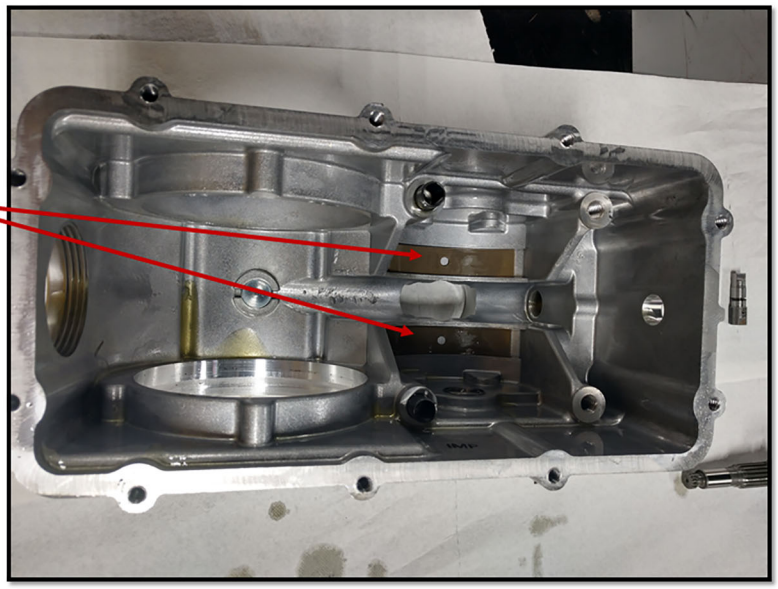

- Place the trunnion arm into the housing.
- Lightly apply synthetic oil on the shaft before putting into the housing.
- The trunnion seal should be below the top of the housing face.

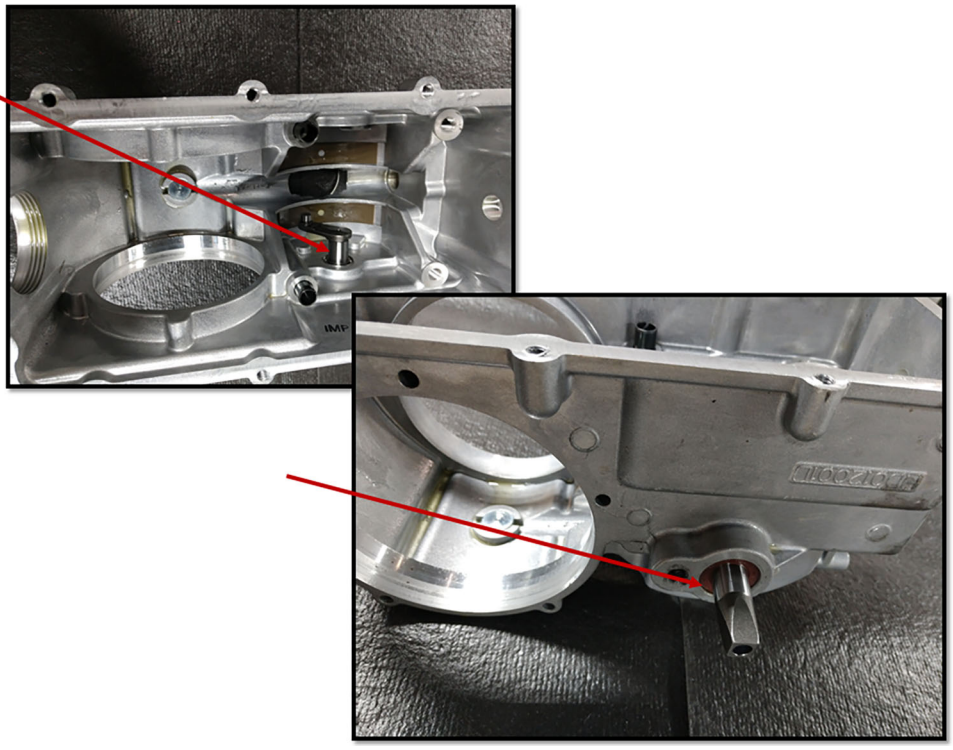

- Inspect the input shaft and bearing.
- Install the oil seal onto the input shaft prior to installing it in the case.
- Install the pump shaft and bearing/seal into the top of the housing.
- Align the bearing with the bore of the housing.

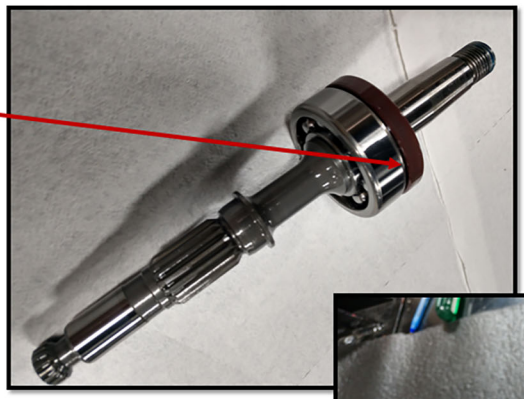

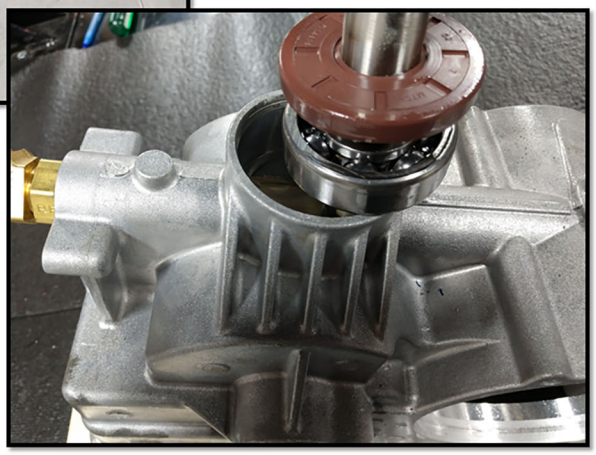

- Seat the pump seal below the snap ring groove.
- Install the snap ring into the housing with an internal snap ring pliers and insert snap ring into the groove of the top of the housing.

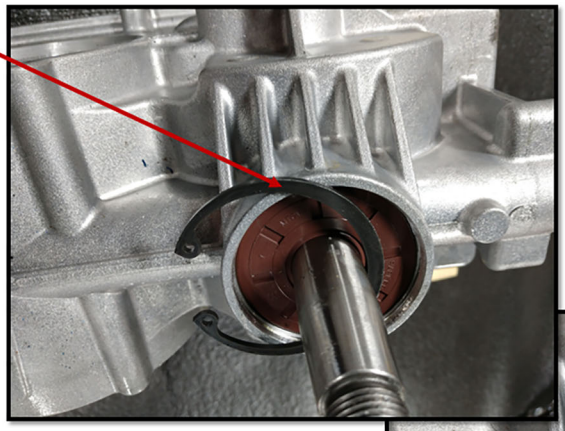

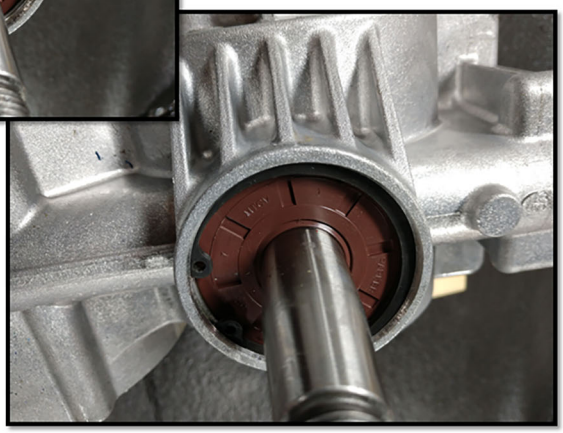

- Install the control block onto the trunnion arm inside the top housing.

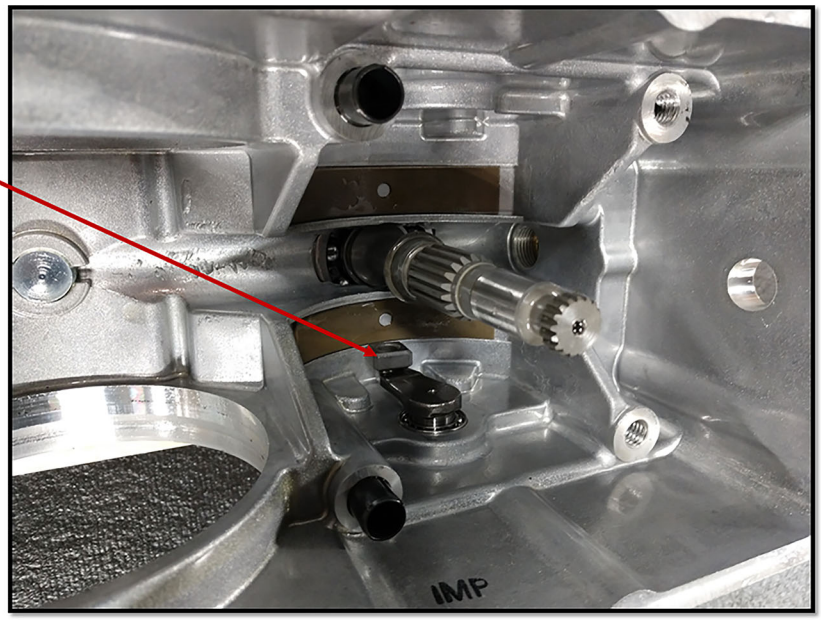


- Install the thrust washer, thrust bearing and top washer into the swash block.
- Apply synthetic oil to the top washer during reassembly.
- Install the swash block subassembly onto the cradle bearings in the top housing.
- Align swash block with the control block using a small screwdriver.

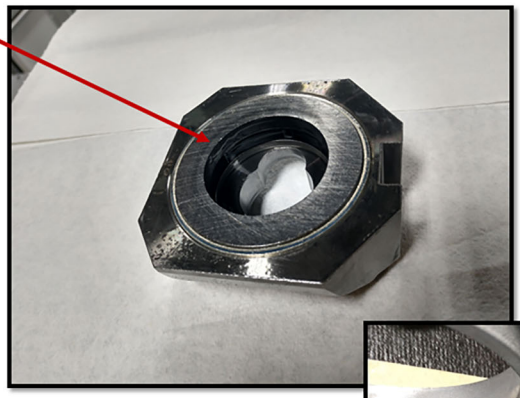

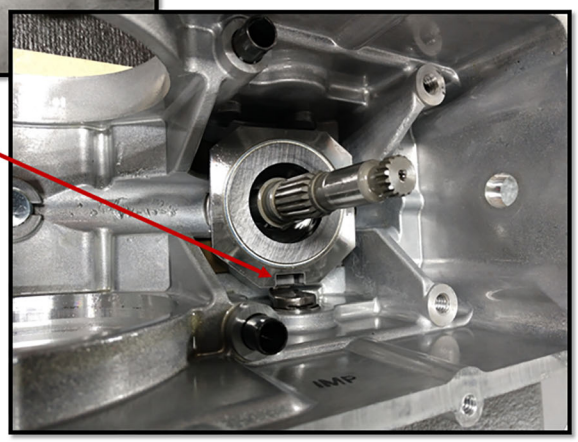

- Verify the swash block moves freely back and forth on the bearing bushings without binding or dragging.
- Install the central spring onto the pump shaft.

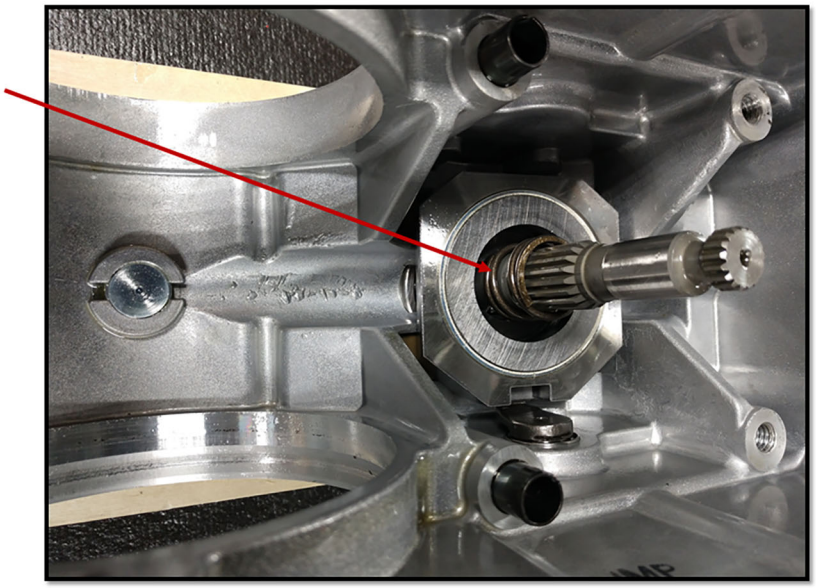

- By holding all the pistons tight in the rotating group, turn it upside down and position the pistons towards the top of the thrush washer.
- Note: if any pistons fall out of the block, you will have to start this step over.

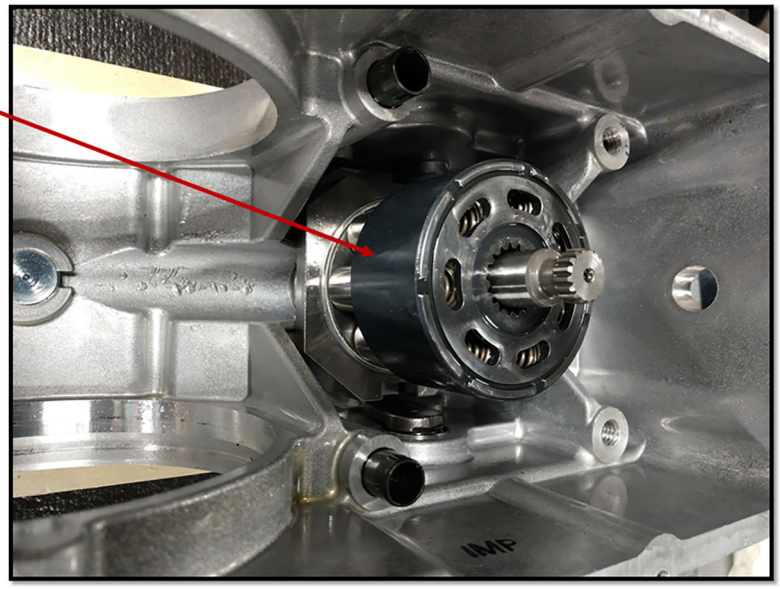

- Make sure the end block face is free of any debris and apply oil to the face of the end block.
- Oil will allow the port plate to stick to the end block.

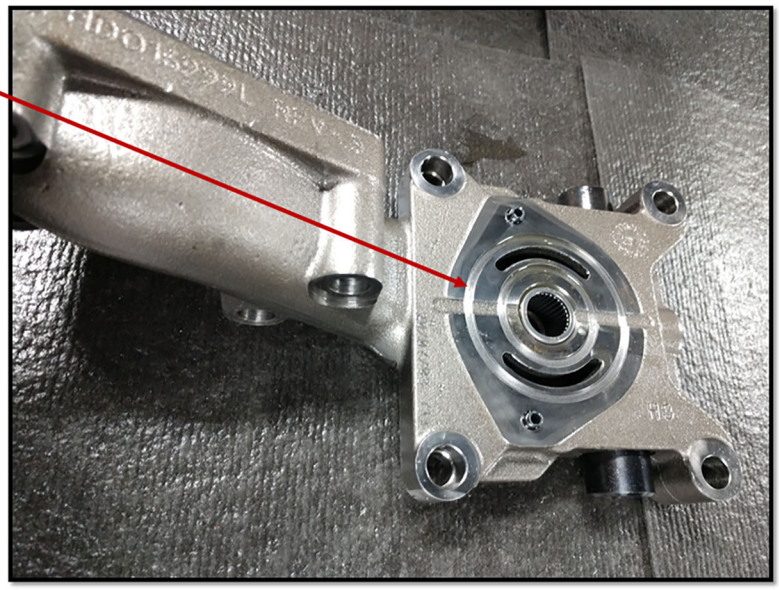

- Place the bypass relief valve into the end block.

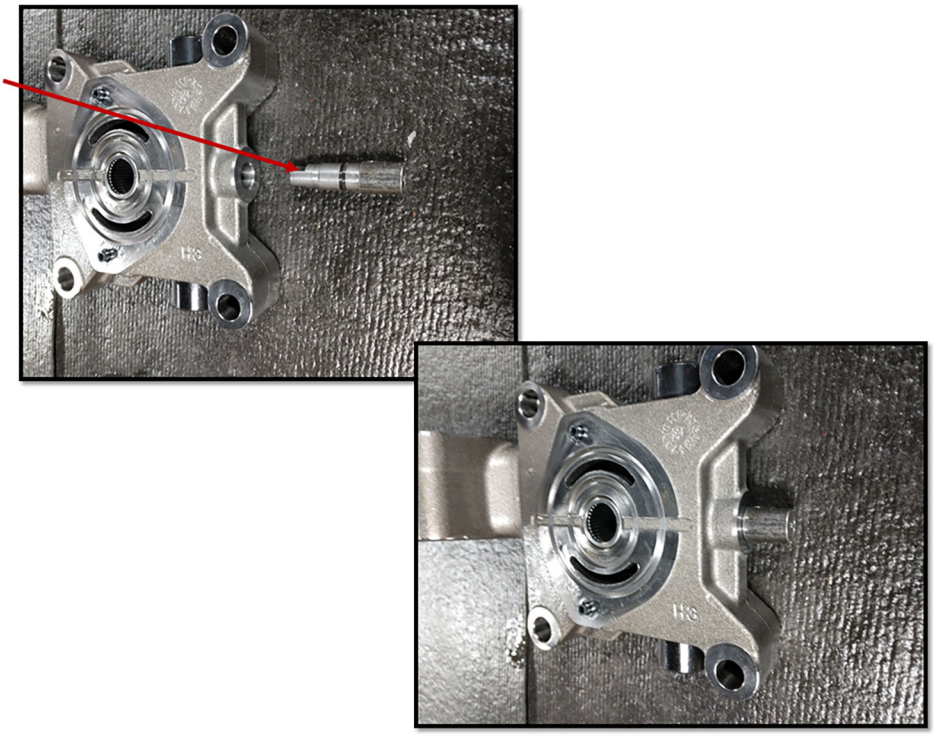

- Port plate goes onto the end block.
- Bronze side facing up.
- Align the port plate onto the end block.
- The port plate needs to be aligned with the dowel pins.

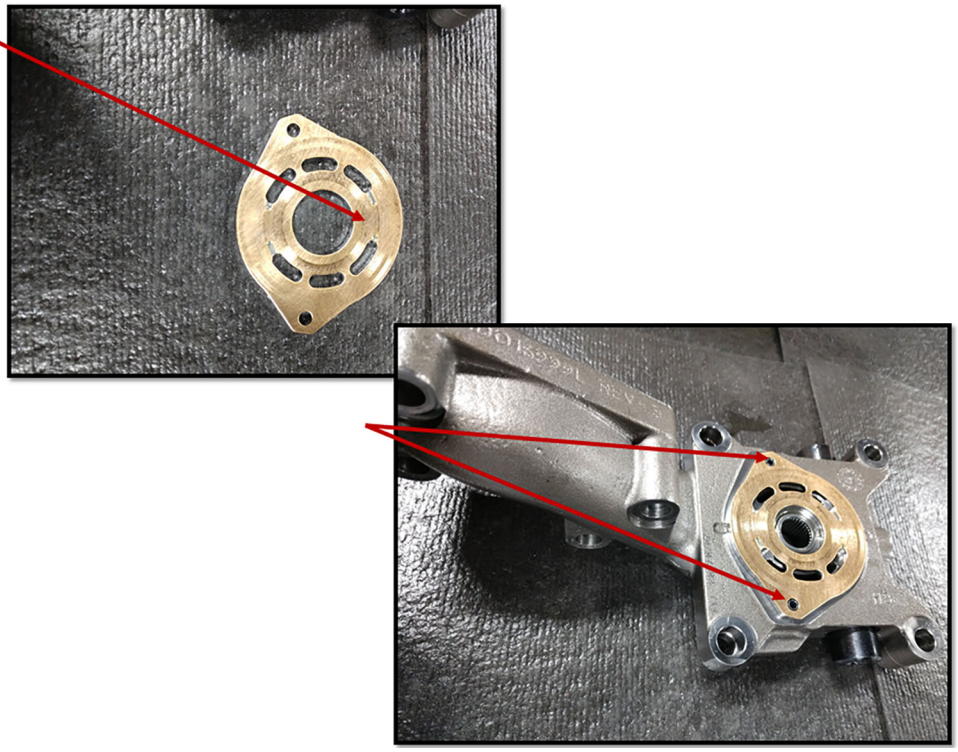

- Place end block into top housing.
- Handle carefully - not to damage the splines of the charge pump shaft and to ensure the port plate stays in place.
- Insert and hand start the four Allen head bolts that are 3/8-16 x 2".

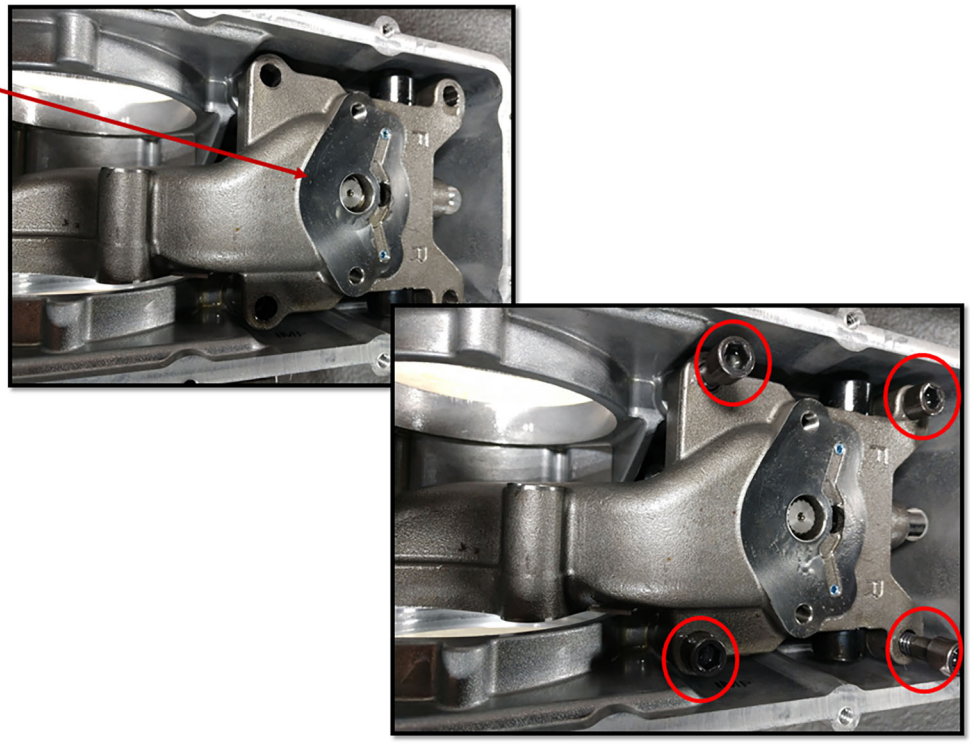

- The 8 mm Allen wrench is needed.
- Torque to 45 – 55 ft. - lbs.




- Lay out the charge pump system and look for wear or damage before installing into the top case.
- Install the rotor.
- Place the rotor onto the pump shaft splines.

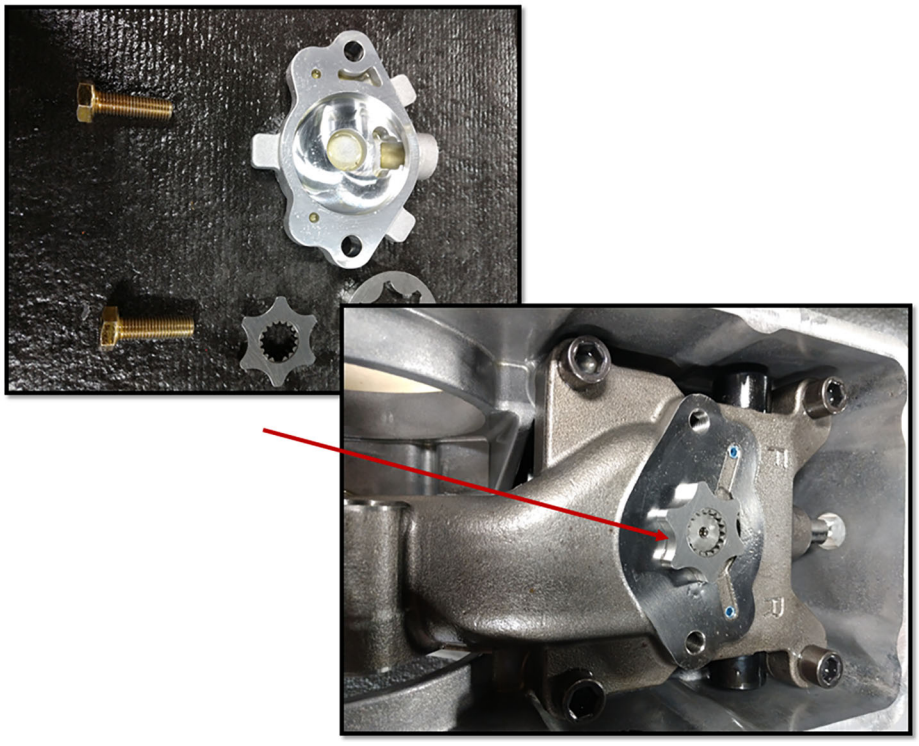

- Install the stator.
- Place the outside stator onto the face of the end block.
- Place the chare pump cover over the charge pump rotor and stator.

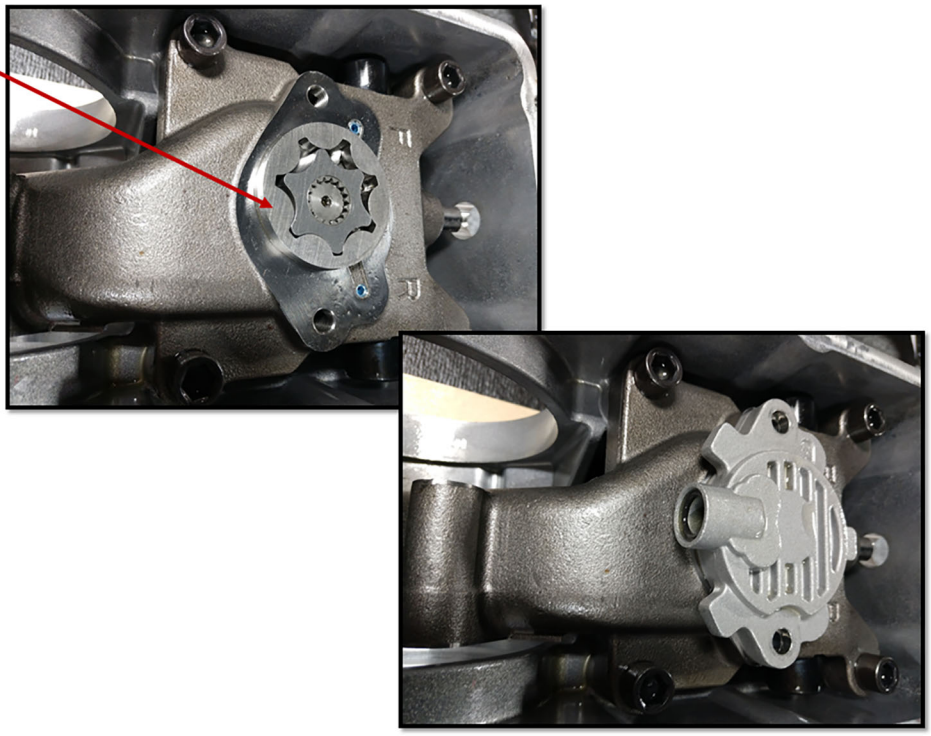

- Align the bolt holes in the cover to the holes in the end block.
- Hand start the two bolts of the charge pump cover to the end block and torque to 90 – 110 in. lbs.

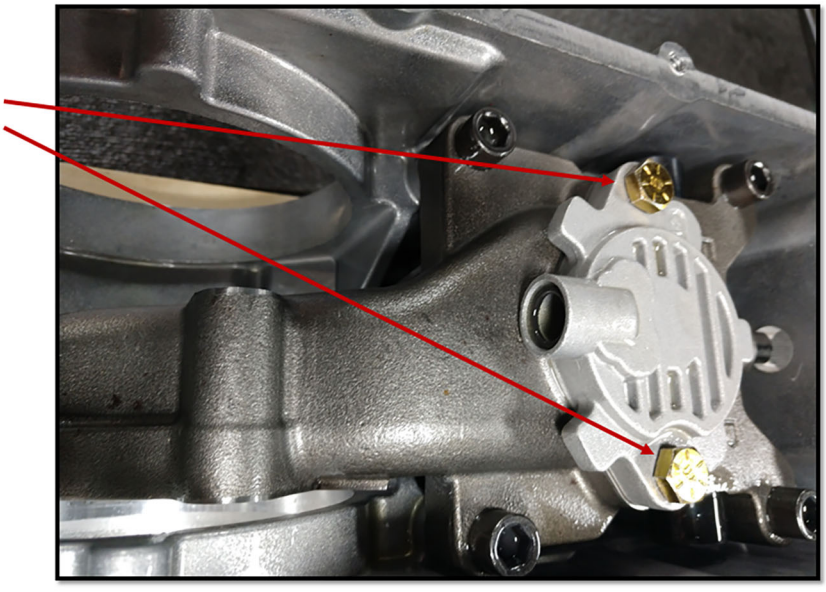

- Place an O-ring onto the end of the charge pump pick up tube.
- Push the charge pump tube inside of the charge pump cover.

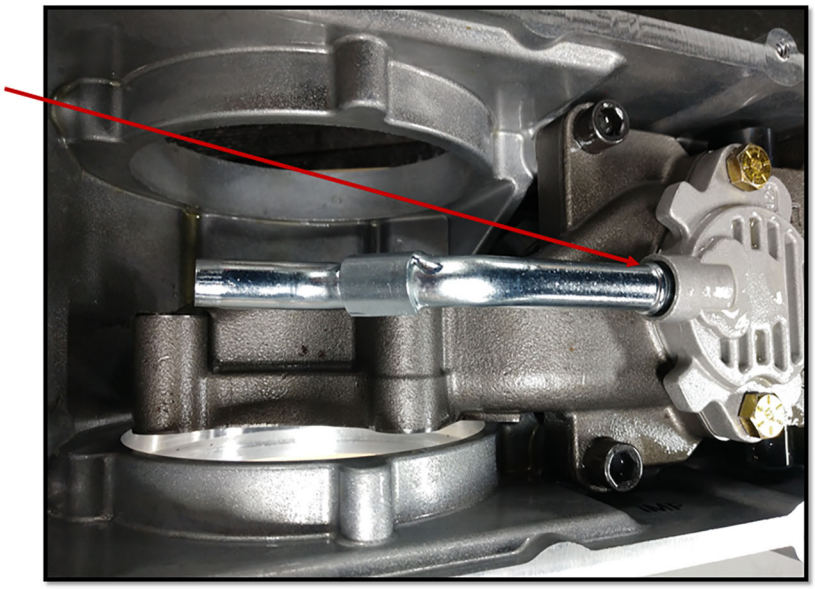

- Bypass lever and stem before installing into the transmission case.
- Retaining clip which is inside the case to hold stem in place.
- Bypass lever and stem pushed into the transmission case.



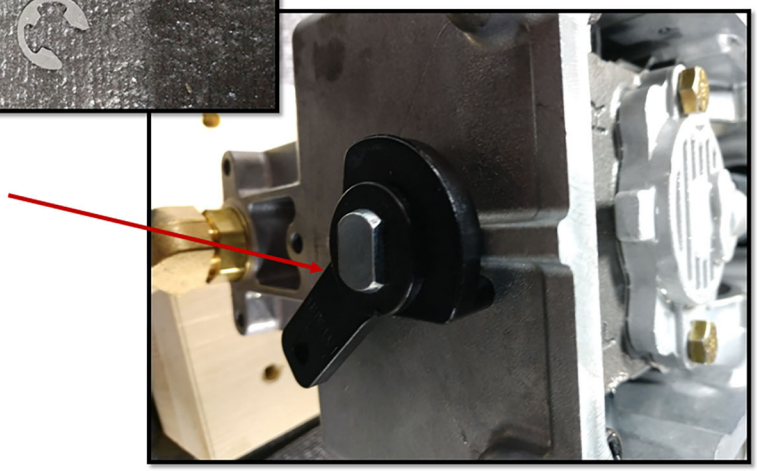

- Place the bypass stem into the top housing hole and align it with the bypass valve.
- Push the retaining clip on to the stem of the bypass valve groove.

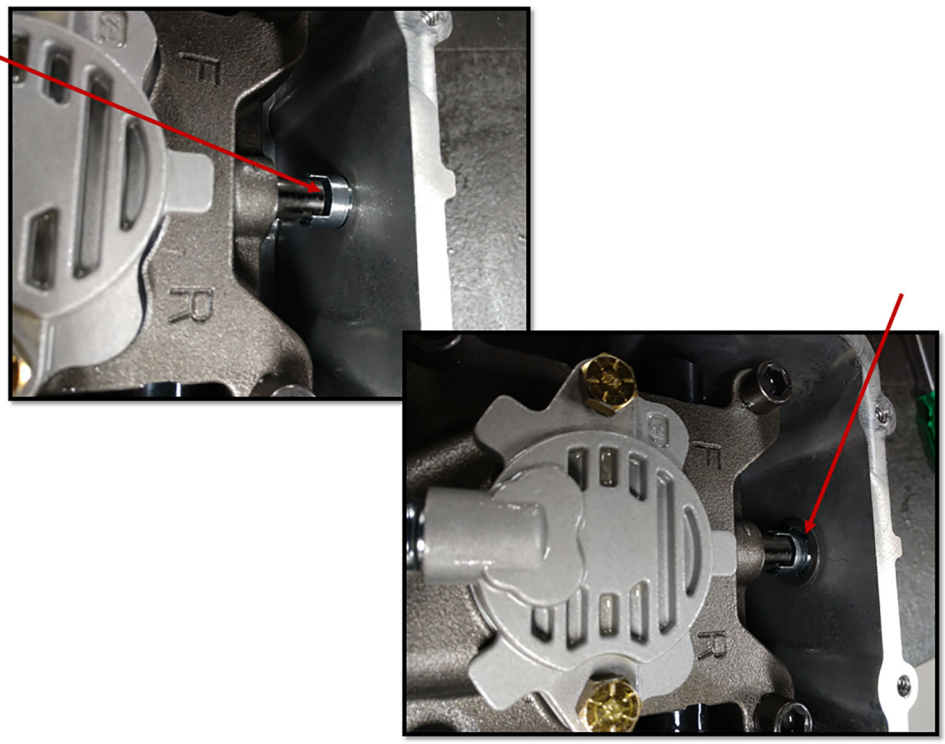

- Place the empty motor housing in fixture to hold the unit in place so assembly can take place. Inspect the bore and make sure the bearing are in their proper place.

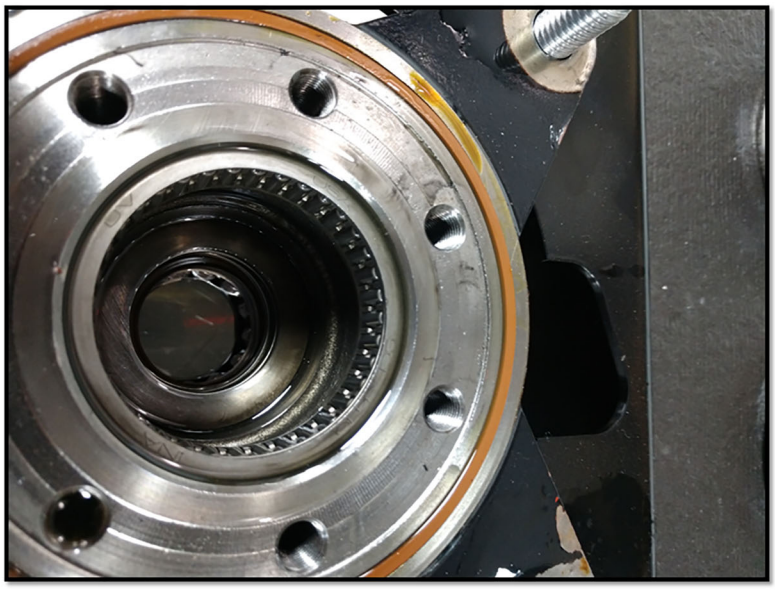

# Motor Assembly

- Inspect the drive shaft that the wheel hub is mounted on for damage before reinstallation.
- Replace if damaged.
- Apply synthetic oil to the motor shaft to help it pass through the lip of the axle seal.
- Slightly rotate the shaft while pushing it through the seals and make sure it bottoms out in the housing against the bearings.

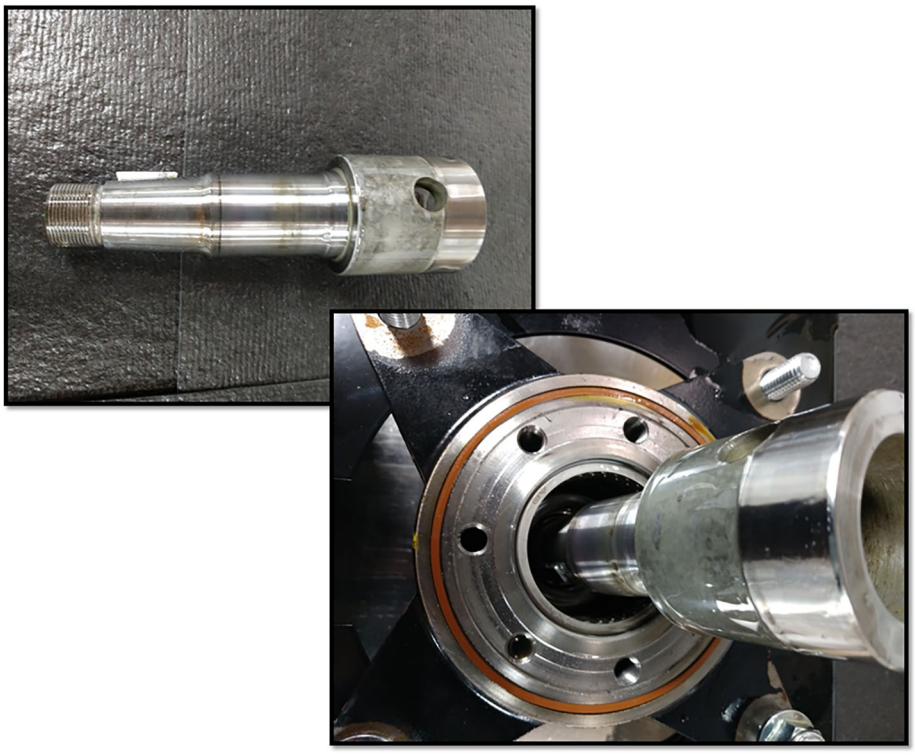

- Top of the output shaft should be even with the radial bearing face.
- Install the thrust bearing onto the end of the coupling shaft.



- Inspect the drive link in the areas of the splines, look for cracks and chips.
- Install drive link with long splined end down into the coupling shaft.
- Engage the drive link splines until they mesh with the internal coupling splines.
- Make sure the O-ring in in the seal groove.

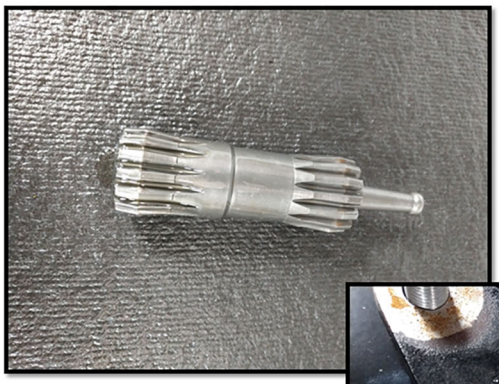

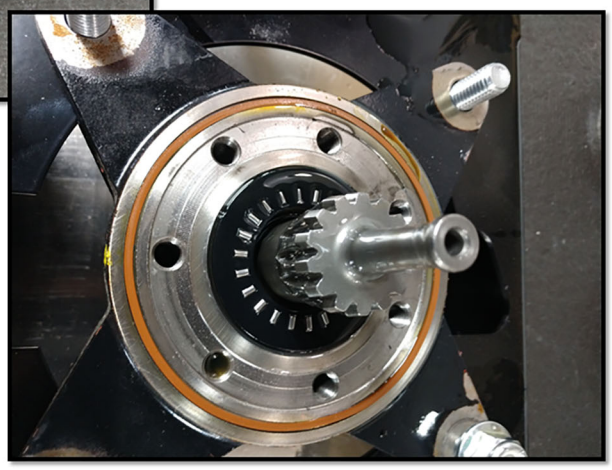

- Inspect the wear plate for wear or damage.
- Place the wear plate over the drive link.
- Align the wear plate holes to the housing holes and line up the reference line on the outside of the motor housing.

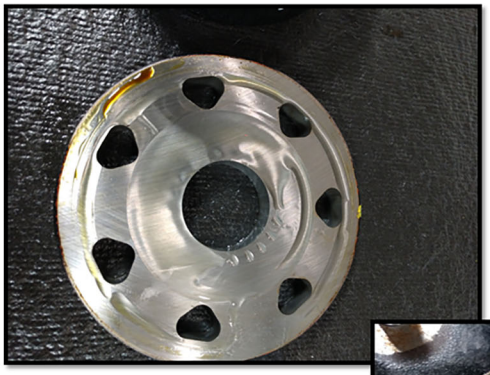

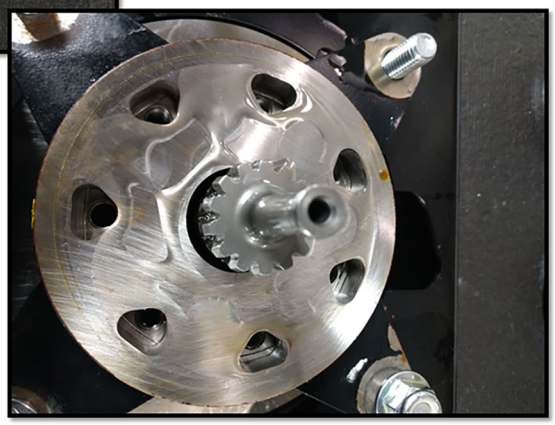

- Assemble the rotor set.
- Note: the rotor counterbore side must be down against the wear plate for the drive link clearance and to maintain the rotor-drive link spline contact.

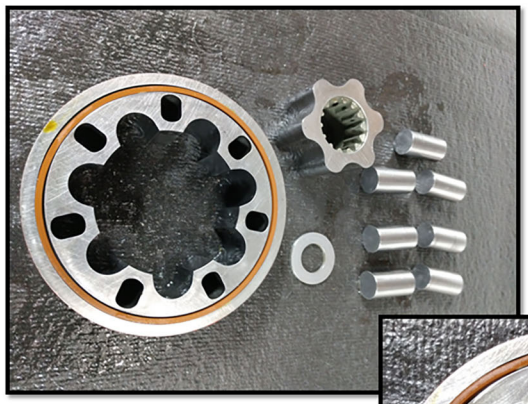

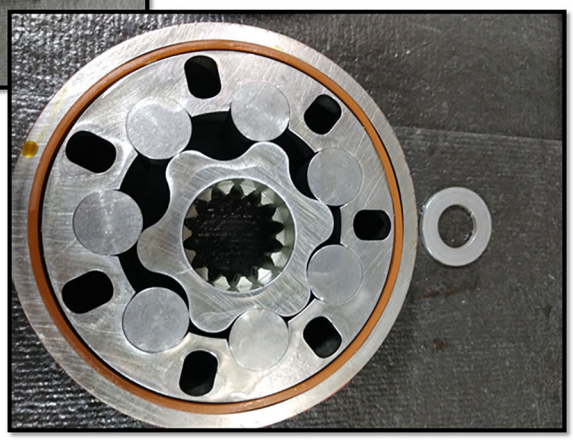

- Place the thrust washer on the tip of the drive link and into the groove of the rotor.
- The manifold surface that must contact the rotor set has a series of irregular shaped cavities on the largest circumference and circle around the inside diameter.
- Position the manifold over the rotor set and align marks on outside of motor.

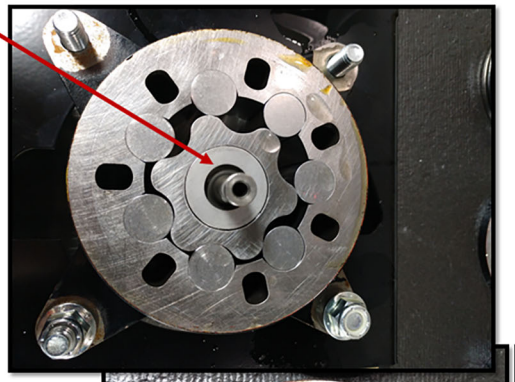

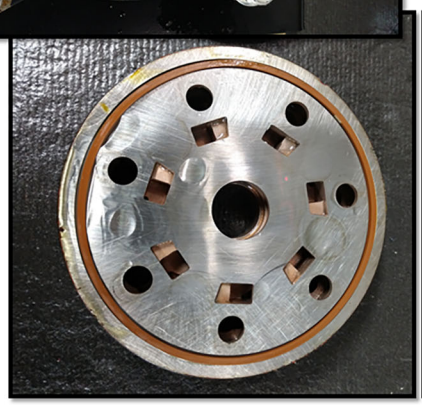

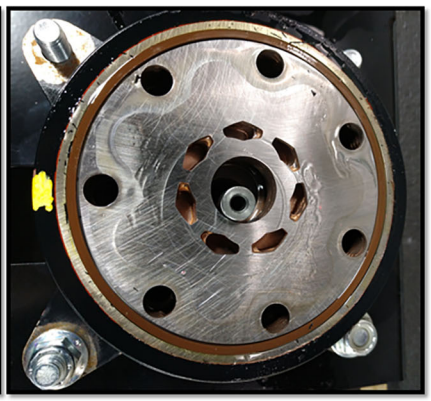

- Assemble the commutator ring.
- The commutator and commutator ring are a matched set.
- Place the commutator ring on the top of the manifold and align the holes up with the bolt holes of the housing.

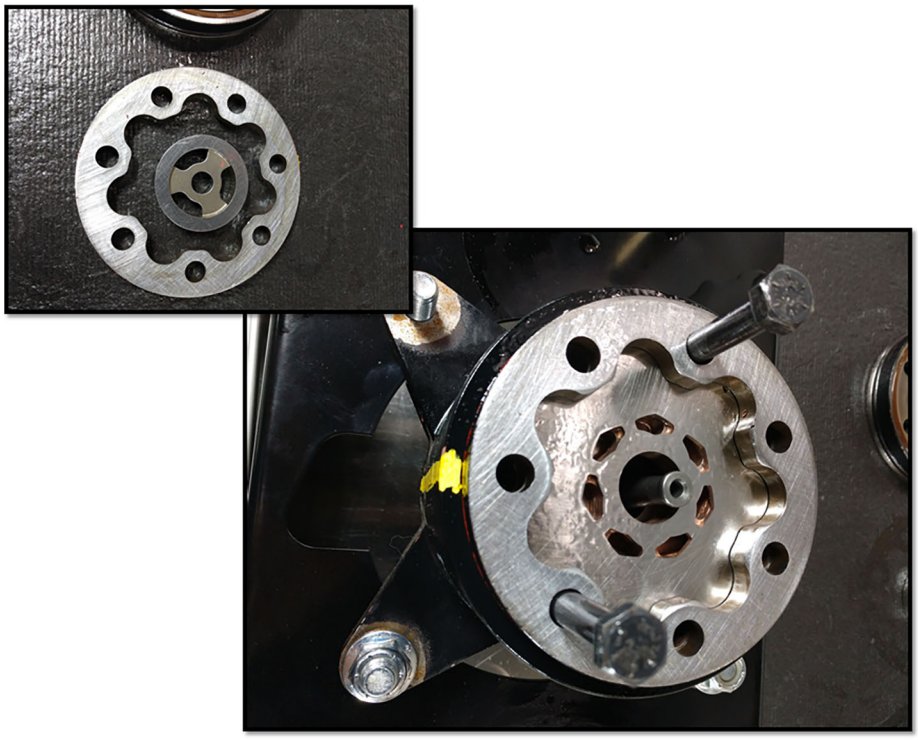

- Assemble the commutator ring.
- The commutator and commutator ring are a matched set.
- Assemble seal ring and end cover.

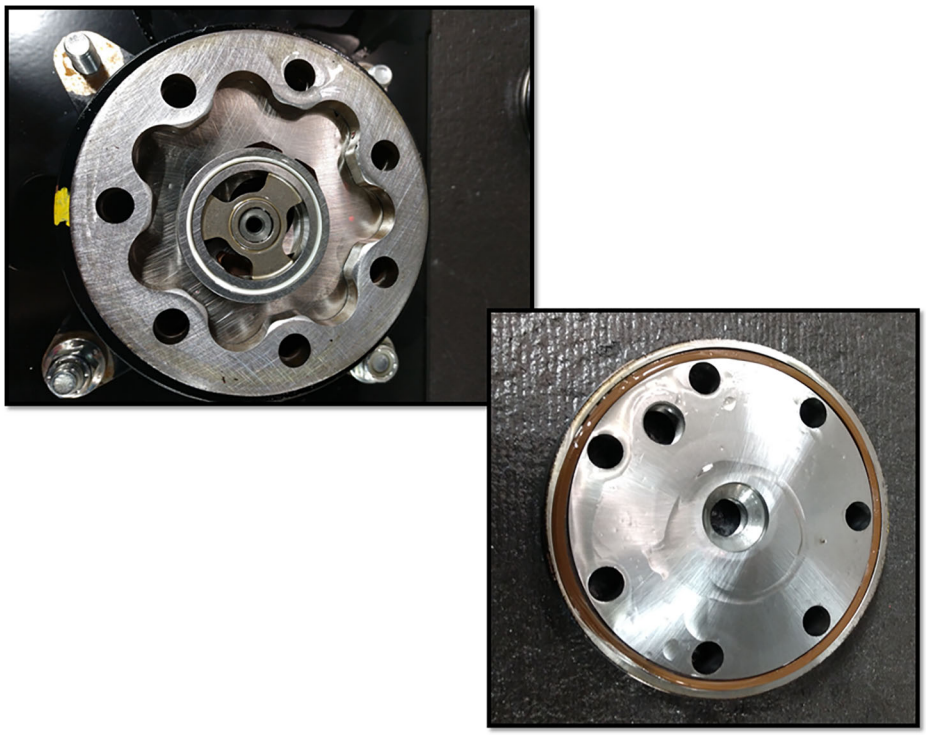

- Install end cover and align the marks on the outside of the body.
- The three short cap screws that hold the wheel motor assembly together before the pump assembly is installed.

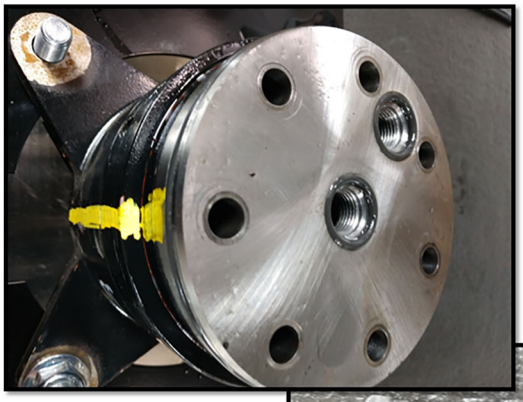

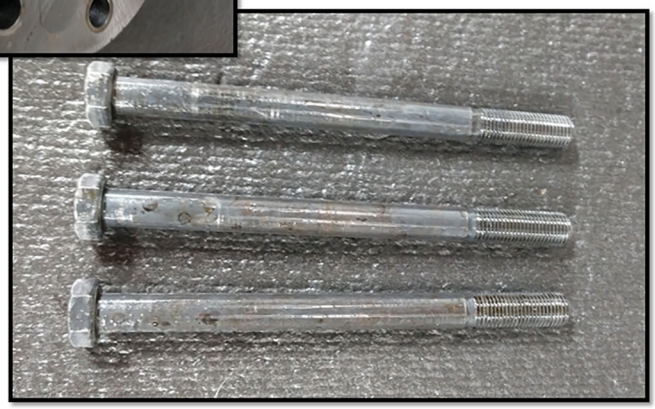

- Install the three cap screws into the end cover and torque to the proper spec.
- The wheel motor assembly is ready to accept the pump assembly.

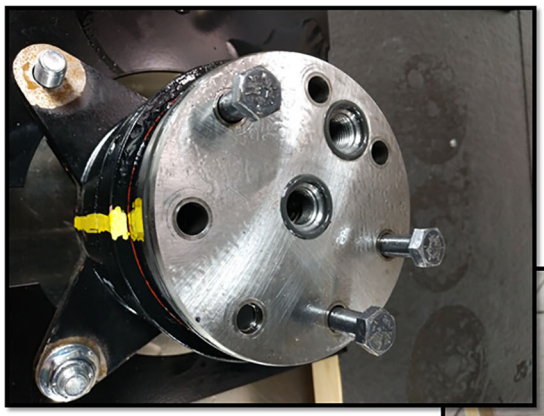

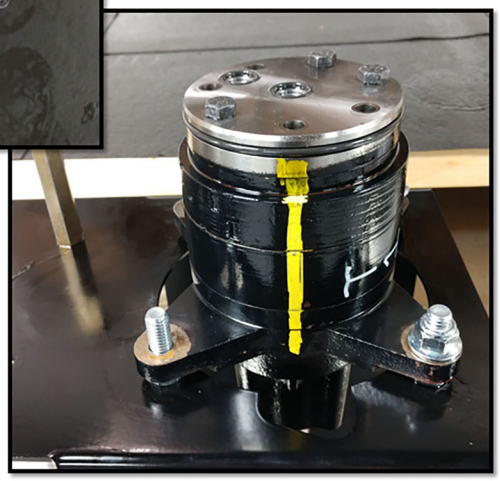

# Transaxle Assembly

- Install the top cover housing onto the motor end cover.
- Align the external markings.

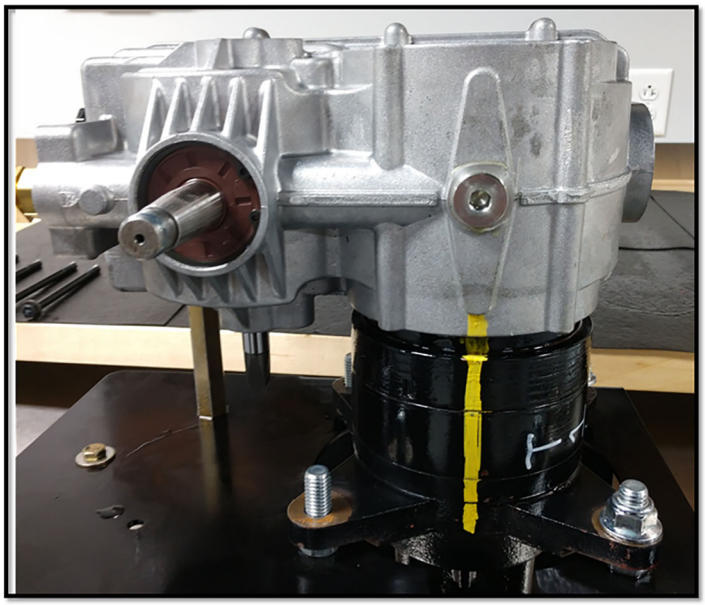

- Align the top housing to the two O-rings in the end cover.
- Press down on the top housing to ensure the end cover O-ring fits inside of the top housing cavity.

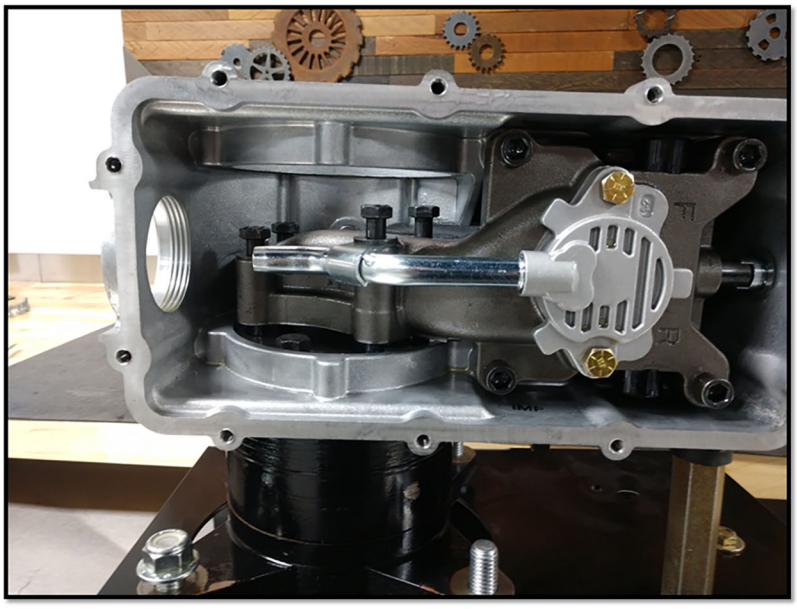

- The oil filter assembly that will need to be assembled and installed into the transmission case.
- The filter assembly assembled.

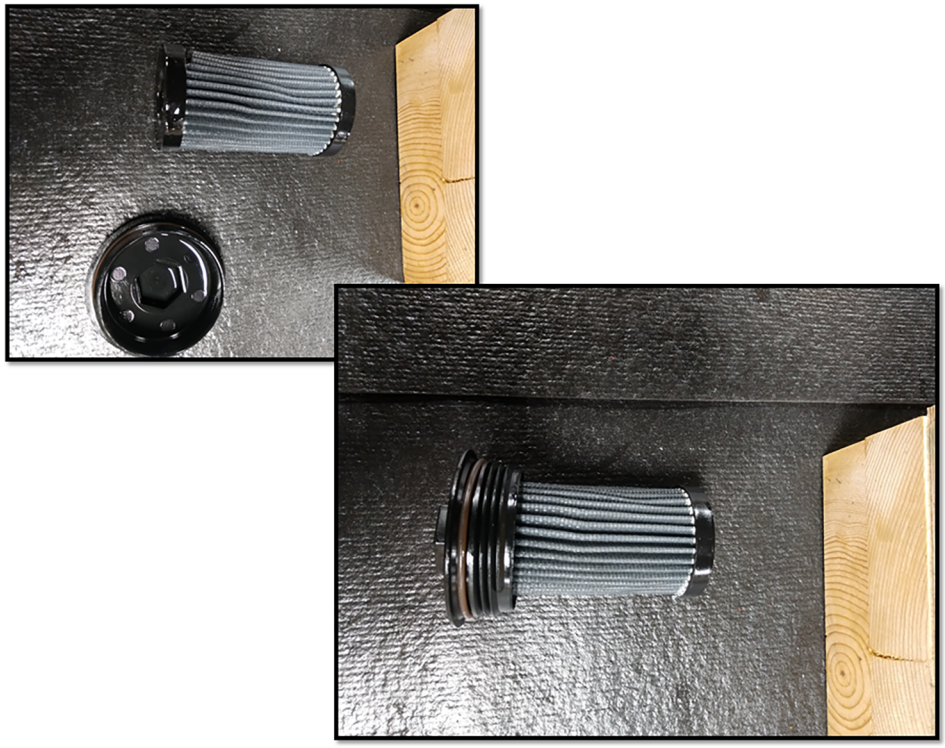

- Hand start the filter into the top housing hand tight.
- Using a socket and torque wrench, torque the filter to 115 – 135 in. lbs.

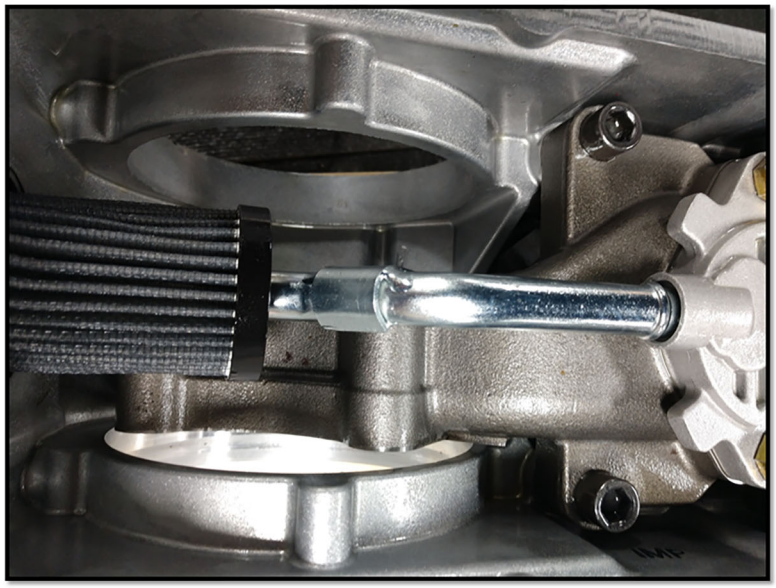

- Install a new gasket on the side cover.
- Make sure the side cover is flat and not damaged.
- Install the side cover gasket.
- Install the five screws to the side plate and torque the hardware that holds the plate in place.

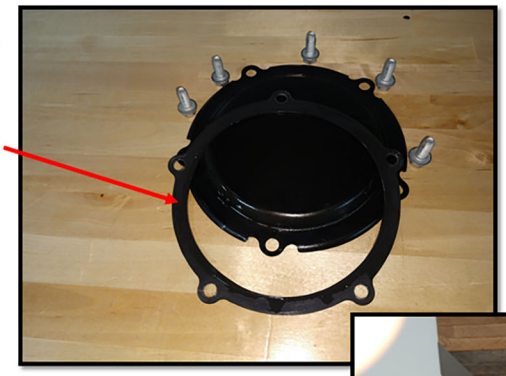

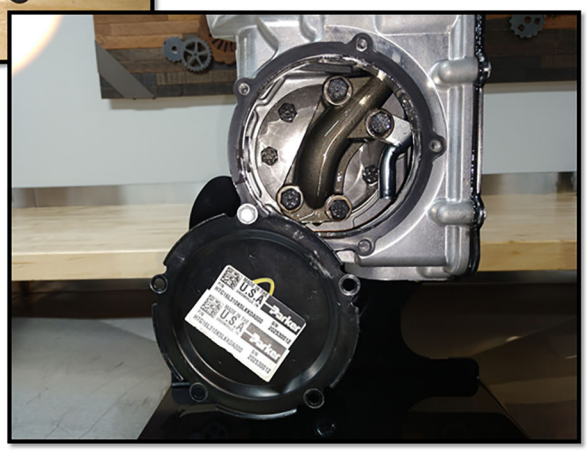

- Install a new bottom cover gasket when the complete tear down is done.
- Install the gasket onto the bottom of the case.

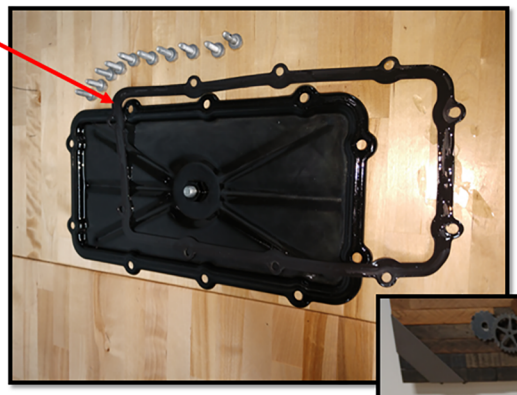

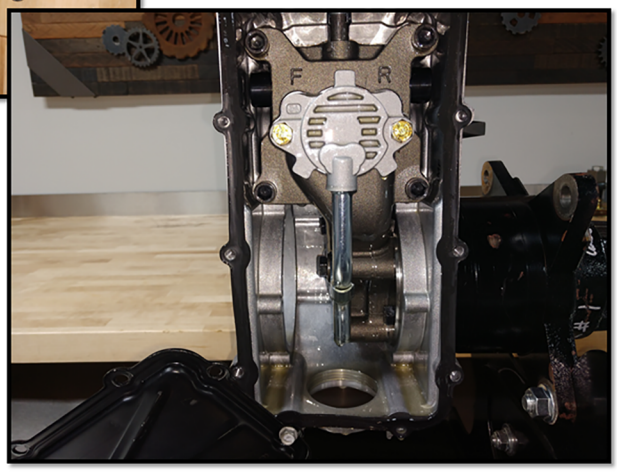

- Install the bottom cover.
- Reuse the 10 ¼-20 screws from the bottom cover.
- Inspect the cover and gasket for proper fit and tight seal.

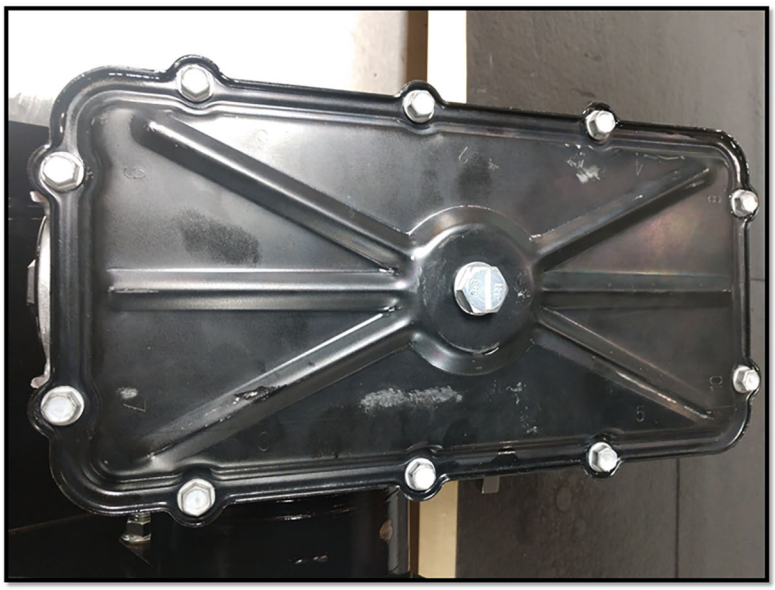

- Inspect the drive control linkage for damage and wear.
- Replace as needed.
- Note the location of the nylon washers for proper operation.
- Check the threads in the case for damage.

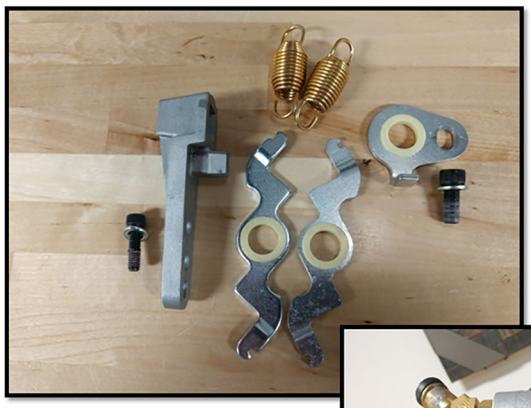

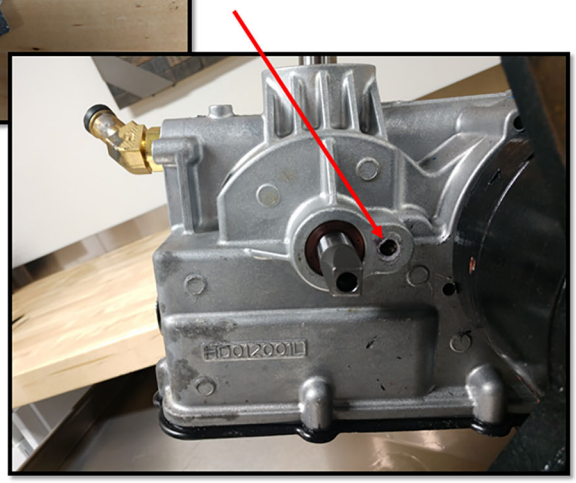

- Install the hydraulic neutral stop to the case using a ¼" Allen wrench.
- Install the return to neutral spring anchor arms.
- Note the location of the nylon washers for freedom of motion.

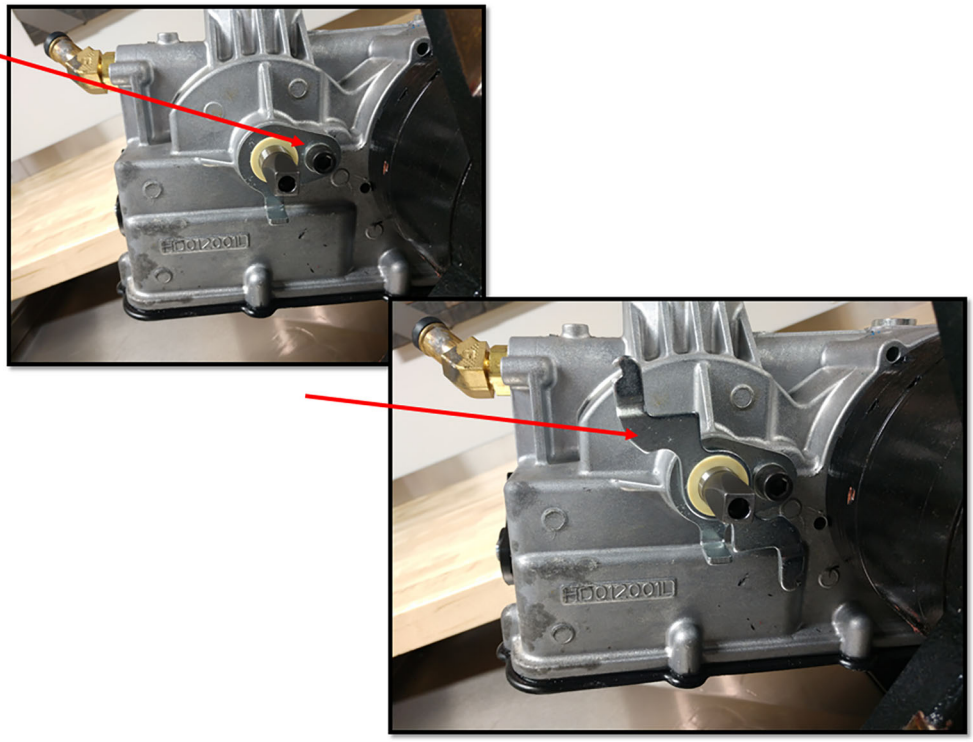

- Install the return to neutral spring anchor arms.
- Note the location of the nylon washers for freedom of motion.
- Install the directional control arm.

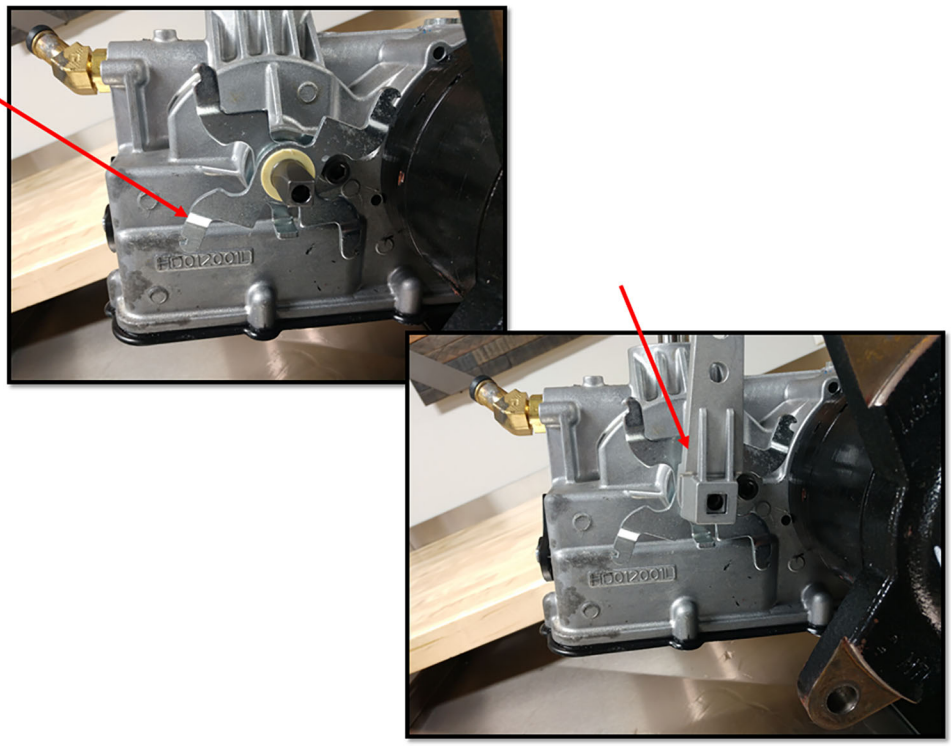

- Install the directional control arm.
- Use a 3/16" Allen wrench to install the Allen head screw.

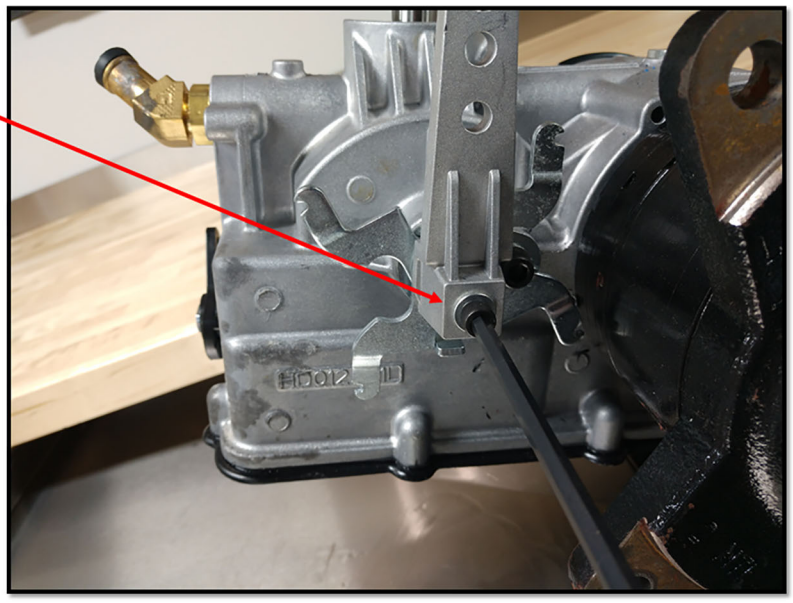

- Install the return to neutral springs to the return to neutral assembly.
- The return to neutral springs installed on the return to neutral assembly.

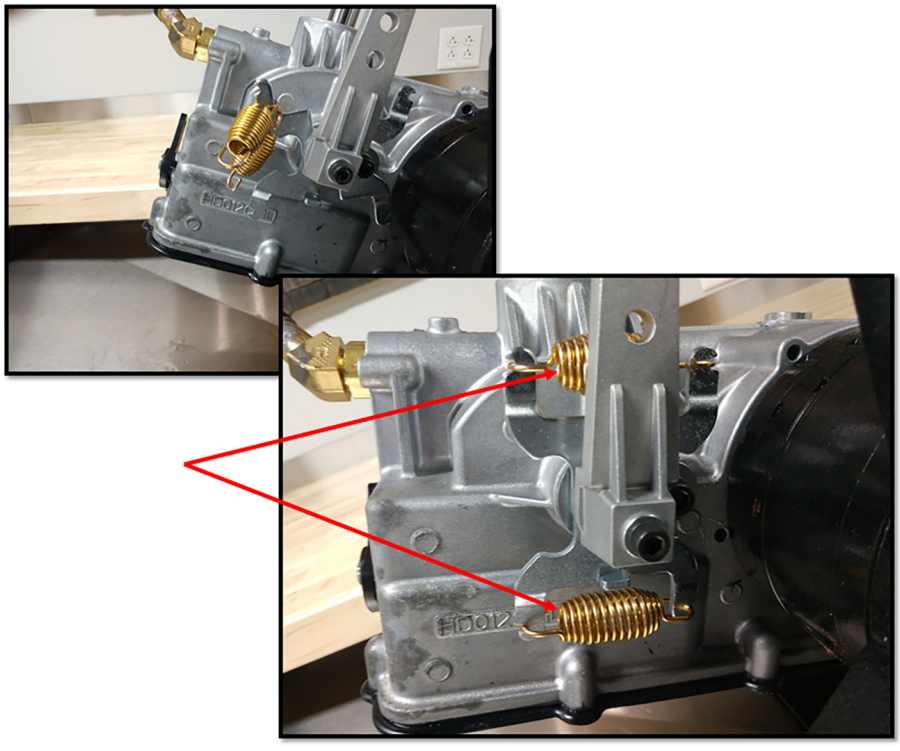

# Deck System Troubleshooting

## Pro-Turn 600

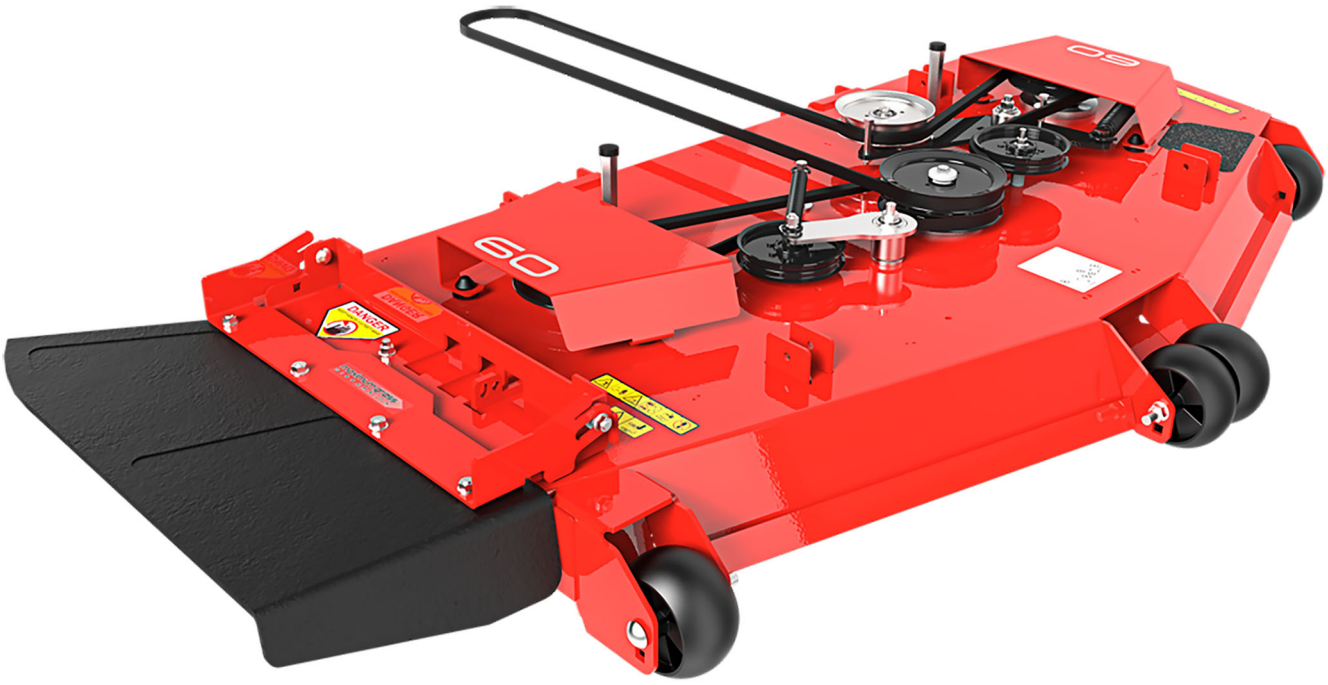

# Learning Objectives

After completing this course you will...

- Understand how each deck component can contribute to quality of cut issues.
- Know what common symptoms to look for when assessing deck failures.
- Understand how to effectively use troubleshooting tools to isolate deck system issues.

# Pulley Wrap

- Pressure from the idler on the belt supplies the proper tension.
- Belt slip occurs when idler pressure is lost.
- Contact area of the belt is increased with CBT system and extra idler.
- ¾ wrap on left hand side; ½ wrap in the center.
- Right spindle can only run as fast as the center one.



# Deck Springs

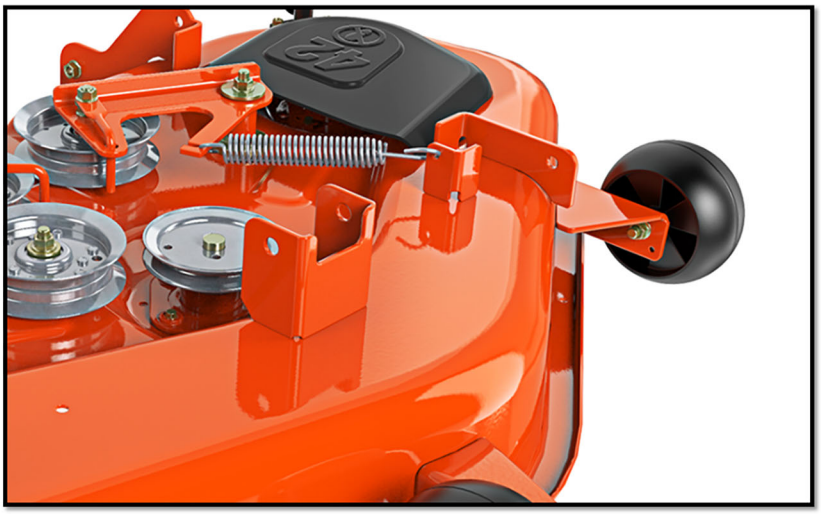

- Constant Belt Tension system pre-sets spring tension. No adjustment needed.
- Older models had adjustable springs with an I-hook and a nut.
- Inspect the condition of your springs for proper tension.
- Visible gaps.

# Belts

- Inspect the condition of your belts.
- Understand the different types of belts we have on our decks.
- Check for wear, glaze, or shininess.
- Belt wear effects spindle RPMs.
- Belts ride on the sides of the pulley, not the bottom of the 'V'.
- Testing belt wear.

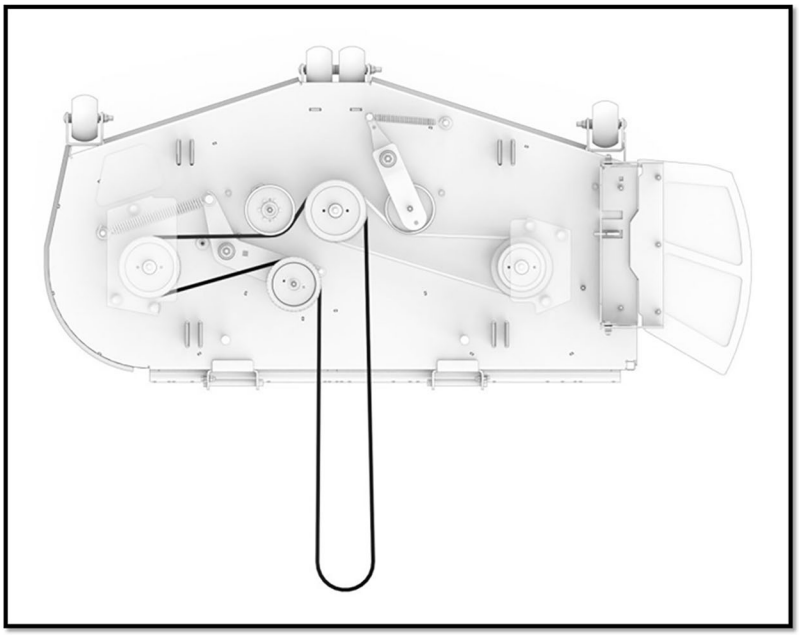

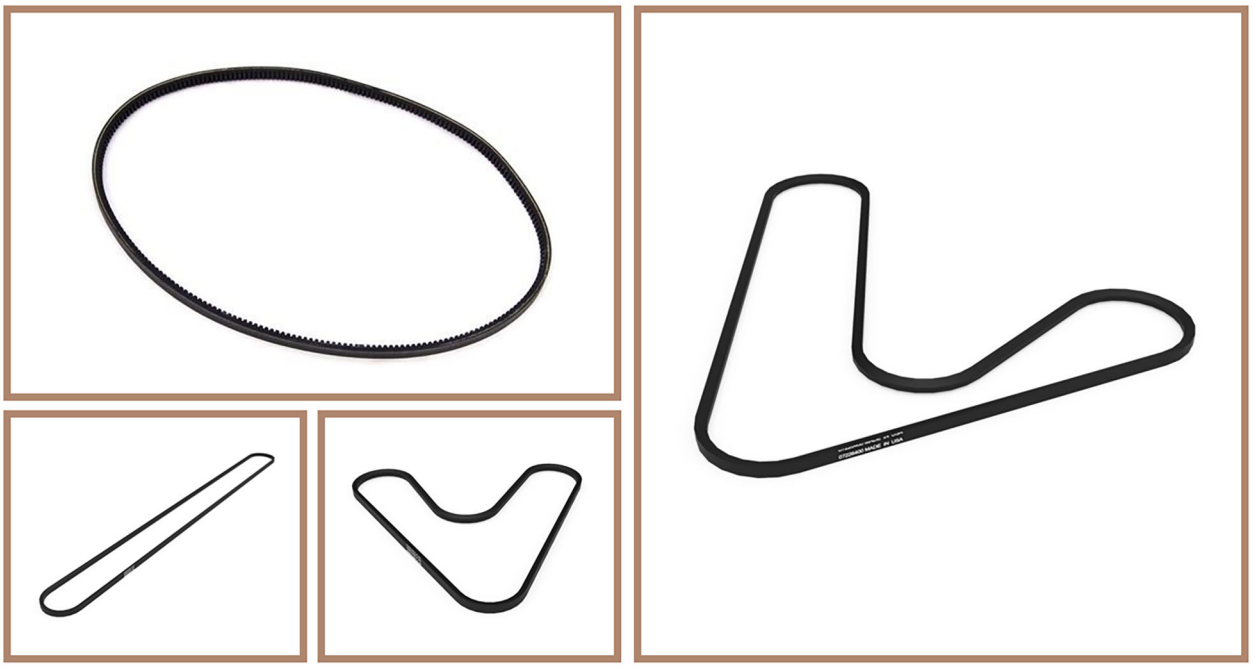

# Pulleys

- Pulleys wear over time.
- Check for the step within the V-groove to verify.

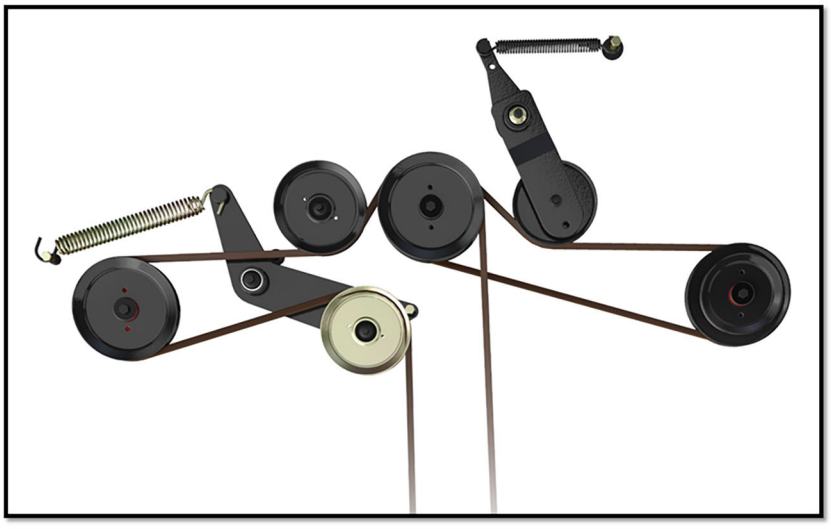

# Spindle Troubleshooting

- Poor quality of cut – streaking – indicator of spindle issue.
- Assess spindle speed.
- Spindle speed changes from deck to deck based on pulley size and blade size.



# Spindle Troubleshooting

- Use a Photo-Tachometer and Reflective Tape
- Place small piece of tape on top of each pulley near the outside.
- Start machine and engage PTO at full throttle.
- Let the deck warm up for 5 minutes for normal operating temperature.
- Check left spindle first, then center, then right.
- Compare readings.



# Spindle Troubleshooting

- Compare RPMs and use a temperature gun if the readings do not match.
- Read temp from top of spindle bolt.
- Left and Center Spindles should compare within 5 degrees.
- Right spindle should be a little less due to less tension from cogged belt.
- High temperature recordings indicate a bad bearing due to friction and drag.




# Key Take-Aways

- Know what to check for with: springs, belts, pulleys, and pulley wrap.
- Understand the different methods to troubleshooting spindle issues.
- Know how to use the deck troubleshooting tools.

# Service Letters & Bulletins

## Pro-Turn 600



# Learning Objectives

After completing this course, you will...

- Understand current Field Bulletins
- Understand current Service Letters
- Other field reported issues

# B-2189R2 Inadequate Wheel-Hub Torque

Description

- Axle nut holding hub to axle shaft could be found improperly torqued

Fix

- Remove cotter pin. Verify torque value minimum 200ft-lbs. Reinstall cotter pin.
- DO NOT loosen nut to align cotter pin.
- 0.2hr warranty reimbursement.

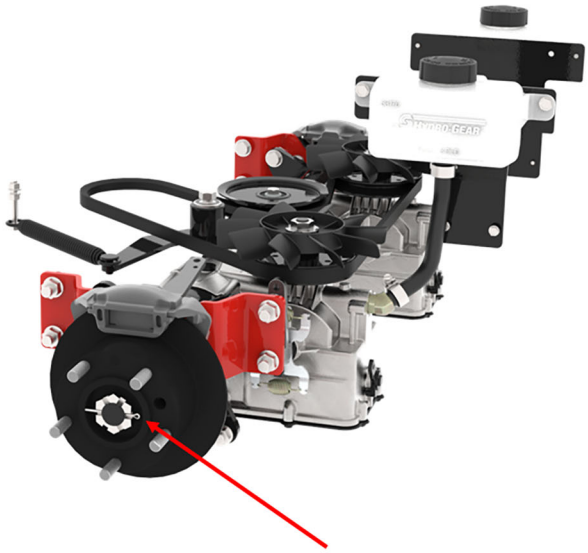

# B-2189R2 Inadequate Wheel-Hub Torque

What if not verified…

- Ability for wheel and hub assembly to disconnect from axle
- Damage of hub wearing on axle
- Possible customer safety concern



# B-2190 Possible Reversed Wires

Description

- Wiring connections to malfunction indicator light (MIL) and oil light could be reversed.

Fix

- Remove RH side control panel and inspect for proper wire installation.
- Engine Oil Pressure Light
  - Violet and Blue/white tracer
- MIL Light
  - Violet and Tan

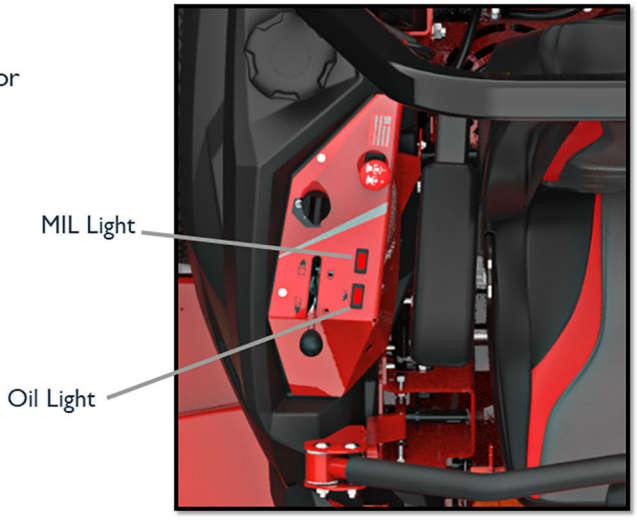

# B-2190 Possible Reversed Wires

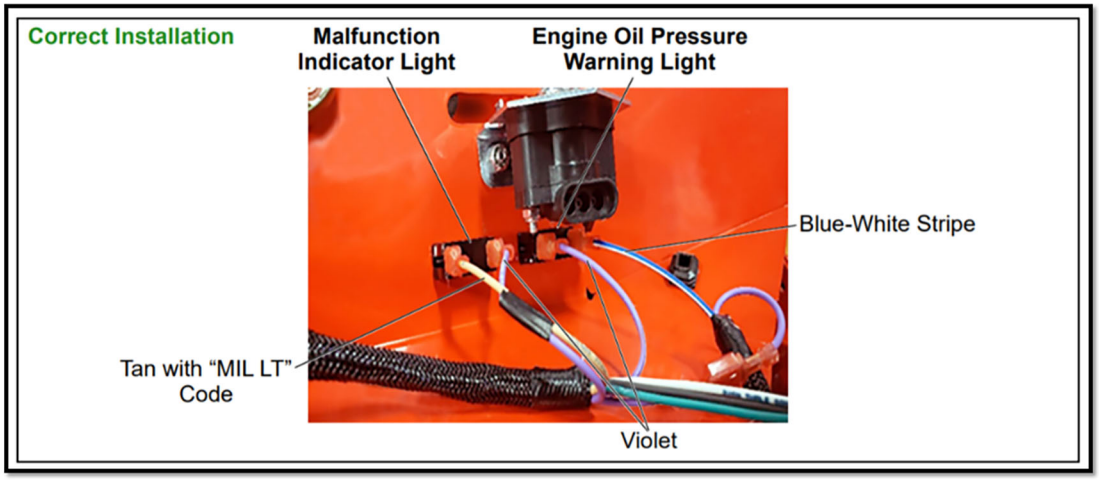


# L-2242 Assembly Instruction Reminder

Description

- Understand and correctly follow assembly procedures

Reasoning for reminder

- Avoid seat switch failure
- Ensure back of seat does not contact engine shrouding
- Positions seat to lean back. Possible customer complaint.
- Ensure seat will not rotate forward and ROPs to function as intended.



# L-2242 Assembly Instruction Reminder

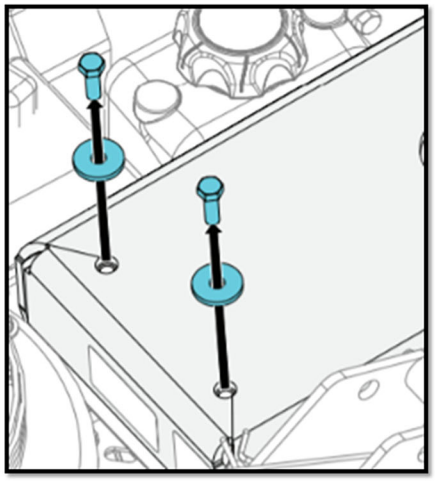

Critical Steps

Removing the hardware installed in the seat mount support

Loosen/remove hardware to move seat into operating position

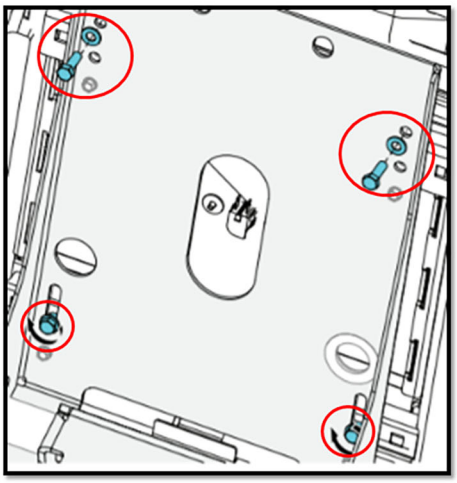

# L-2242 Assembly Instruction Reminder

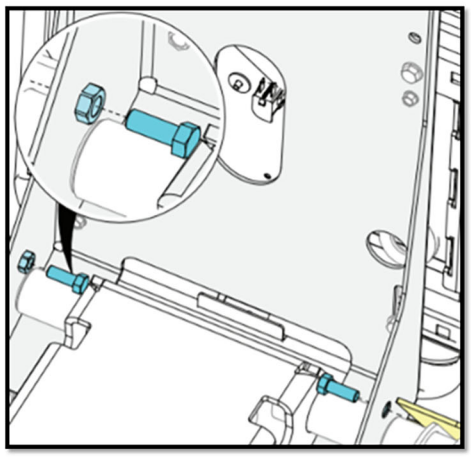

Critical Steps

Install seat stop bolts (from literature pack) from inside the seat plate

Reinstall hardware to secure seat plate to suspension pod. Torque to 18-22ft-lbs

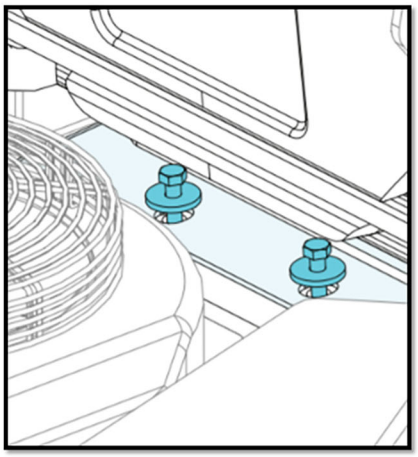

# Key Take-Aways

- Confidence and understanding in…
  - Current service letters (L-2242)
  - Current bulletins (B-2128R2 & B-2190)
  - Importance of proper unit assembly



# Lawn Service Training 2022

ARIENS | GRAVELY | COUNTAX | Westwood | AS MOTOR | RAPID|CARE