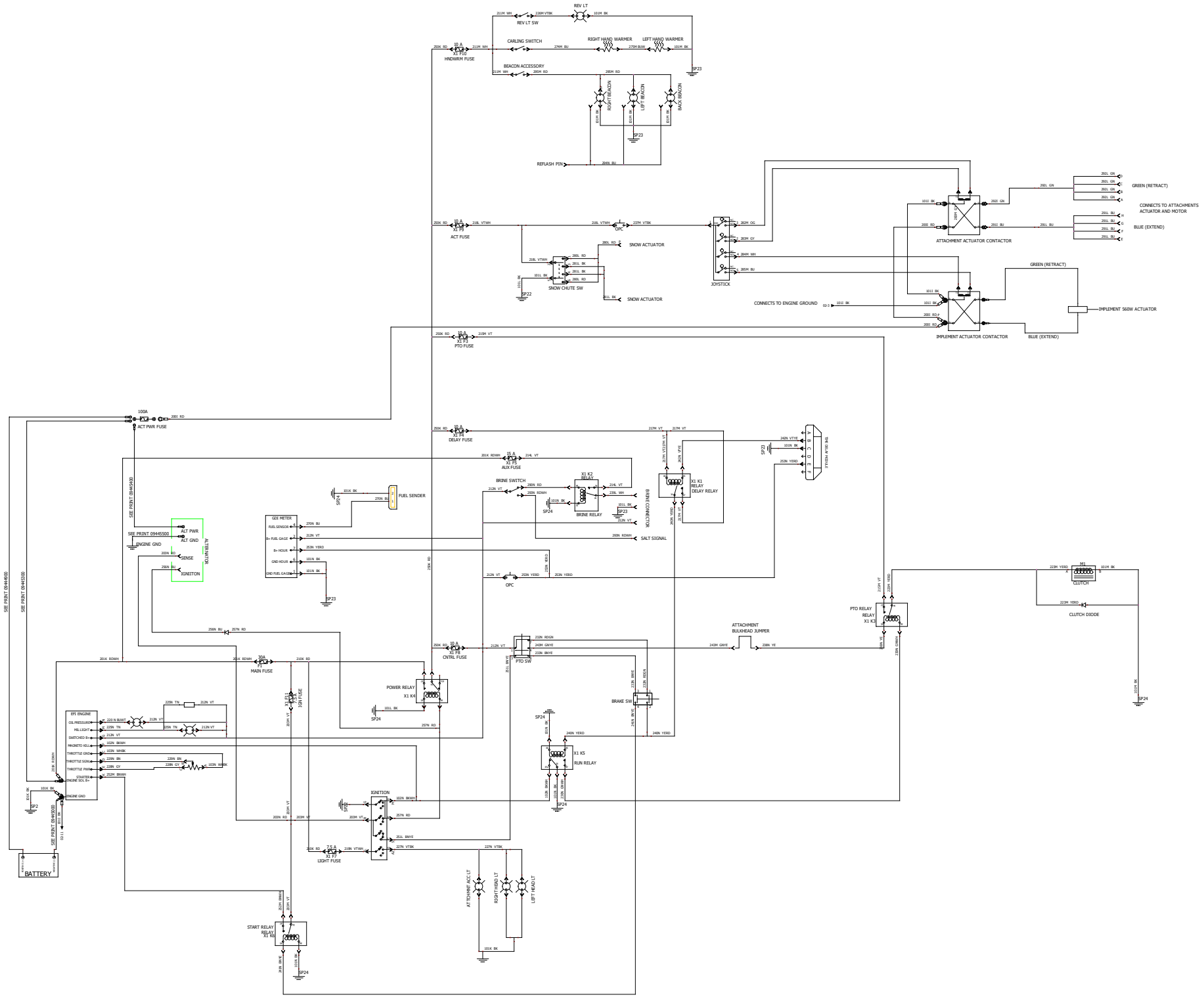
REV LT
REV LT SW
CARLING SWITCH
RIGHT HAND WARMER
LEFT HAND WARMER
10 A
X1 F10
HNDWRM FUSE
BEACON ACCESSORY
RIGHT BEACON
LEFT BEACON
BACK BEACON
REFLASH PIN
10 A
X1 F8
ACT FUSE
OPC
SNOW ACTUATOR
SNOW CHUTE SW
JOYSTICK
ATTACHMENT ACTUATOR CONTACTOR
GREEN (RETRACT)
CONNECTS TO ATTACHMENTS ACTUATOR AND MOTOR
BLUE (EXTEND)
CONNECTS TO ENGINE GROUND
IMPLEMENT ACTUATOR CONTACTOR
IMPLEMENT 560W ACTUATOR
10 A
X1 F9
PTO FUSE
100A
ACT PWR FUSE
10 A
X1 F6
DELAY FUSE
15 A
X1 F5
AUX FUSE
BRINE SWITCH
X1 K2
RELAY
BRINE RELAY
X1 K1
RELAY
DELAY RELAY
TYPE KOA OF VEHICLE
FUEL SENDER
SALT SIGNAL
BRINE CONNECTOR
SEE PRINT 0944500
ALT PWR
ALT GND
ENGINE GND
SENSE
IGNITION
ALTERNATOR
GEX METER
FUEL SENSOR
B+ FUEL GAGE
B+ HOUSE
GND HOUSE
GND FUEL GAGE
OPC
PTO RELAY
RELAY
X1 K3
CLUTCH
CLUTCH DIODE
ATTACHMENT BULKHEAD JUMPER
10 A
X1 F3
CNTRL FUSE
PTO SW
30A
F1
MAIN FUSE
POWER RELAY
X1 K4
BRAKE SW
X1 K5
RUN RELAY
EFI ENGINE
OIL PRESSURE
MIL LIGHT
SWITCHED B+
MAGNETO KILL
THROTTLE GND
THROTTLE SIGNAL
THROTTLE PWR
STARTER ENGINE SOL B+
ENGINE GND
IGNITION
7.5 A
X1 F7
LIGHT FUSE
ATTCHMNT ACC LT
RIGHT HRD LT
LEFT HEAD LT
START RELAY
RELAY
X1 K6
BATTERY
SP2
SP22
SP23
SP24